Title	
ACORN BASIC POWER AND COMMUNICATION CONNECTIONS Bench Test	
Date 170808	Drawn by CEM
Filename S14816.DWG	Sheet 1 of 1

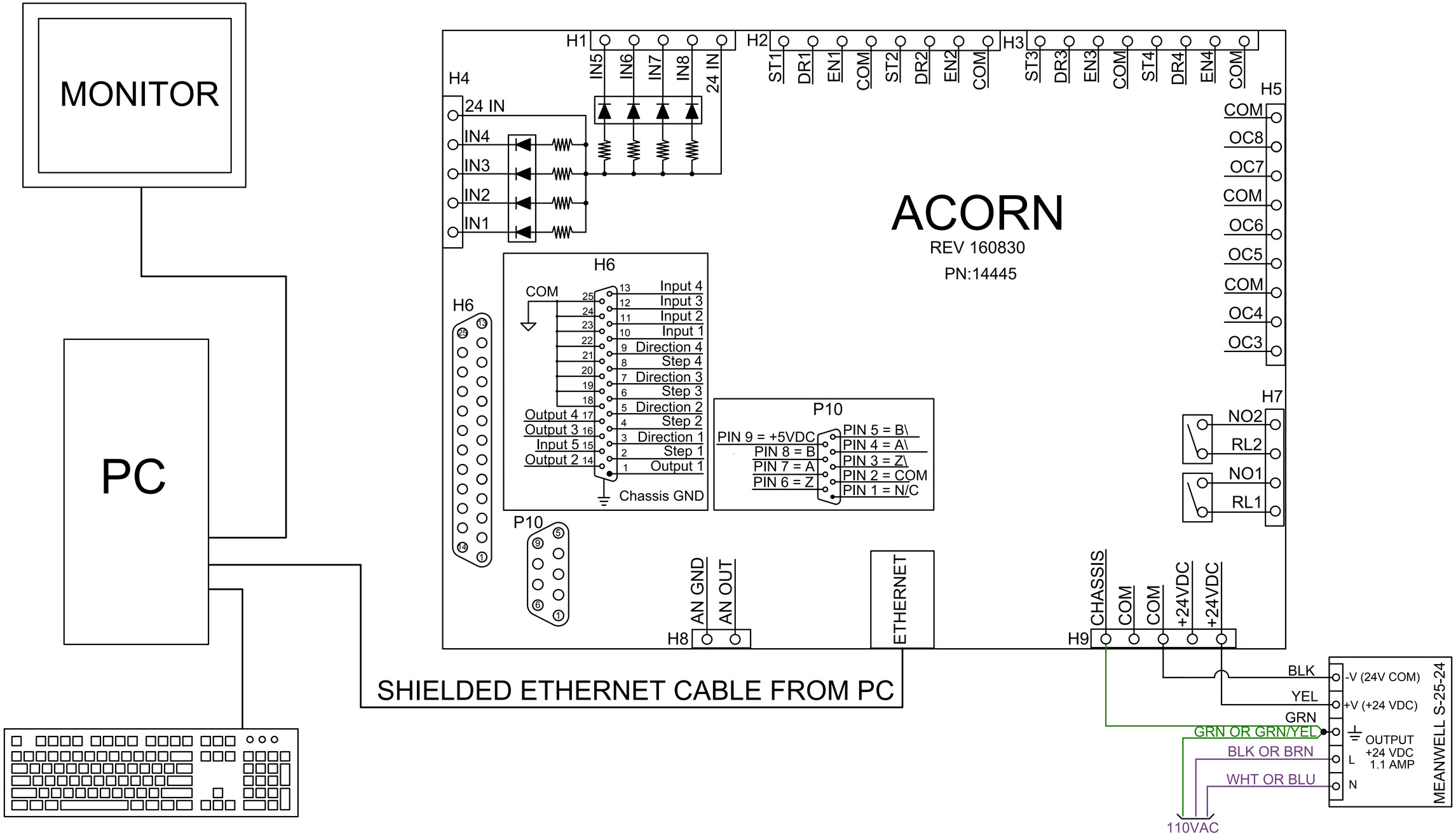

GROUNDS ARE GREEN
110VAC IS VIOLET