Title: ACORN_rev3, GECKO G203V STEPPER DRIVE		
Date: 180424	Ver: 5	Drawn by: CEM/TEP
Filename: S14891.DWG		Sheet 1 of 1

How to tell the difference between Acorn_rev2 and Acorn_rev3
Acorn_rev2 has FIXED green screw terminal blocks
Acorn_rev3 has REMOVABLE green screw terminal blocks

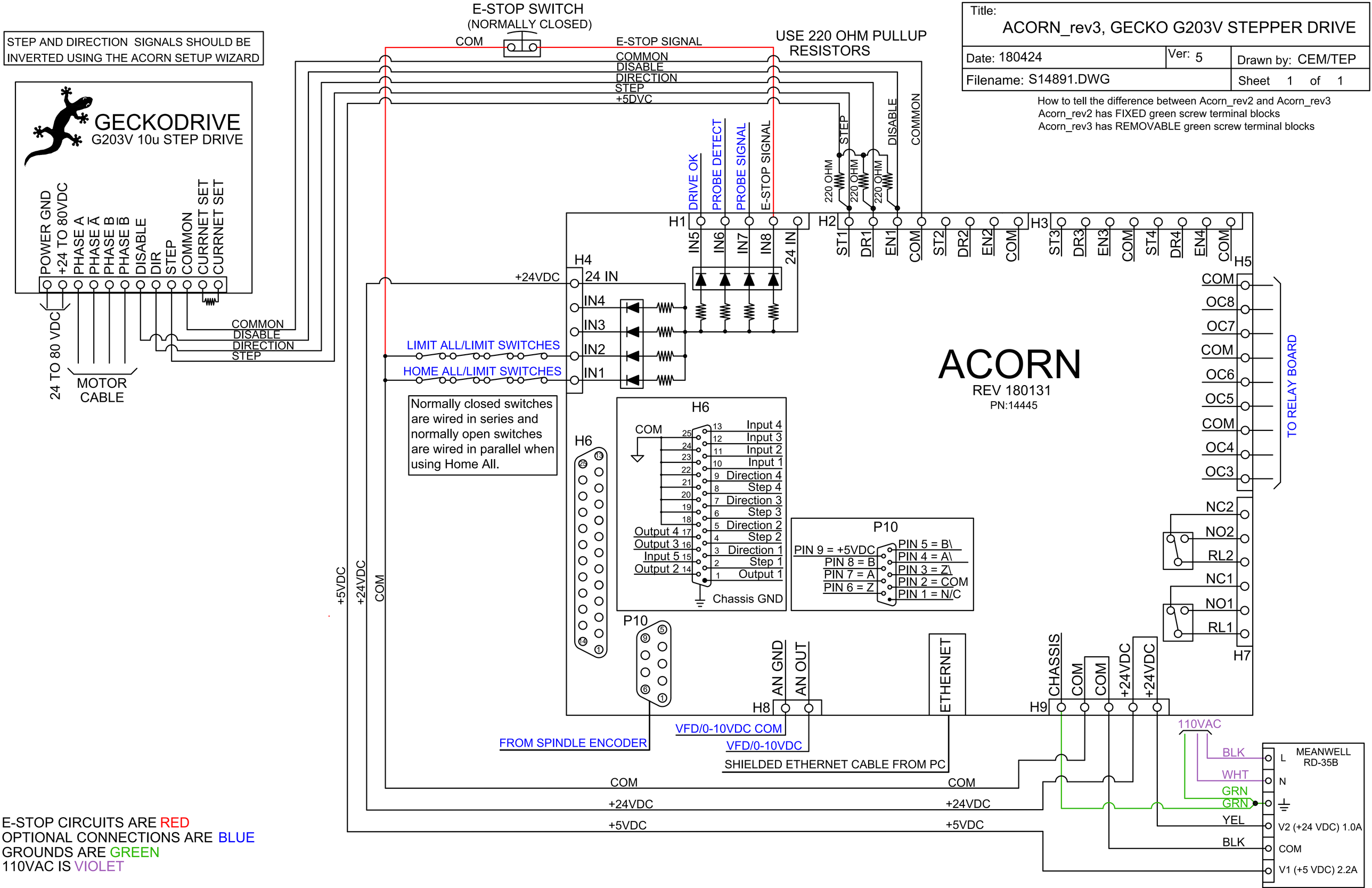

E-STOP CIRCUITS ARE RED
OPTIONAL CONNECTIONS ARE BLUE
GROUNDS ARE GREEN
110VAC IS VIOLET