Title: ACORN CONNECTIONS TO TECO 7300CV	
PLC Program: acorn-mill-universal.src	
Date: 170824	Drawn by: CEM
Filename: S14831.DWG	Sheet 1 of 1

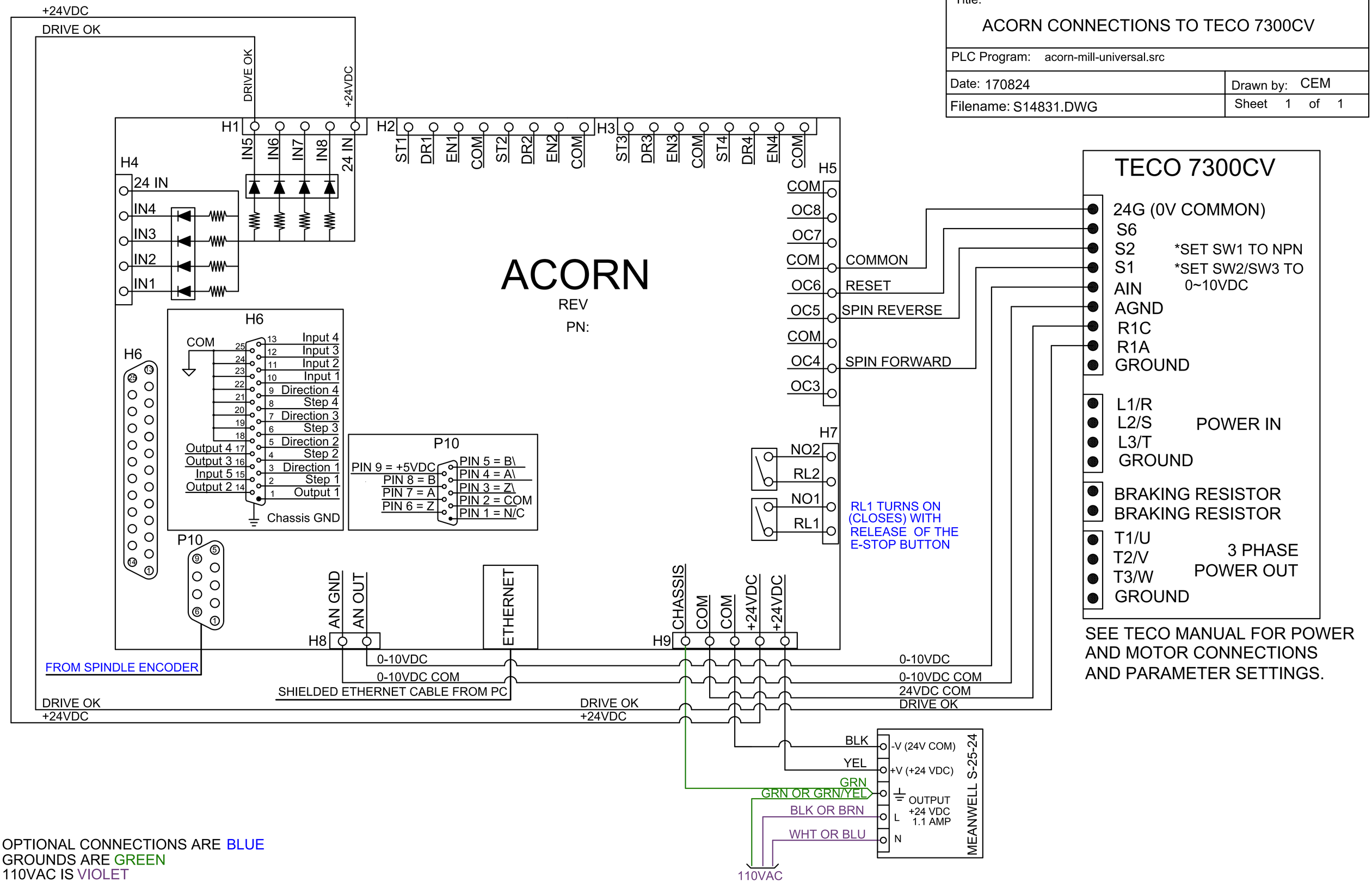

OPTIONAL CONNECTIONS ARE BLUE
GROUNDS ARE GREEN
110VAC IS VIOLET