Title	ACORN CONNECTIONS TO DMM DYN2 SERVO DRIVE		
Date	180115	Drawn by	CEM
Filename	S14828.DWG	Sheet	1 of 1

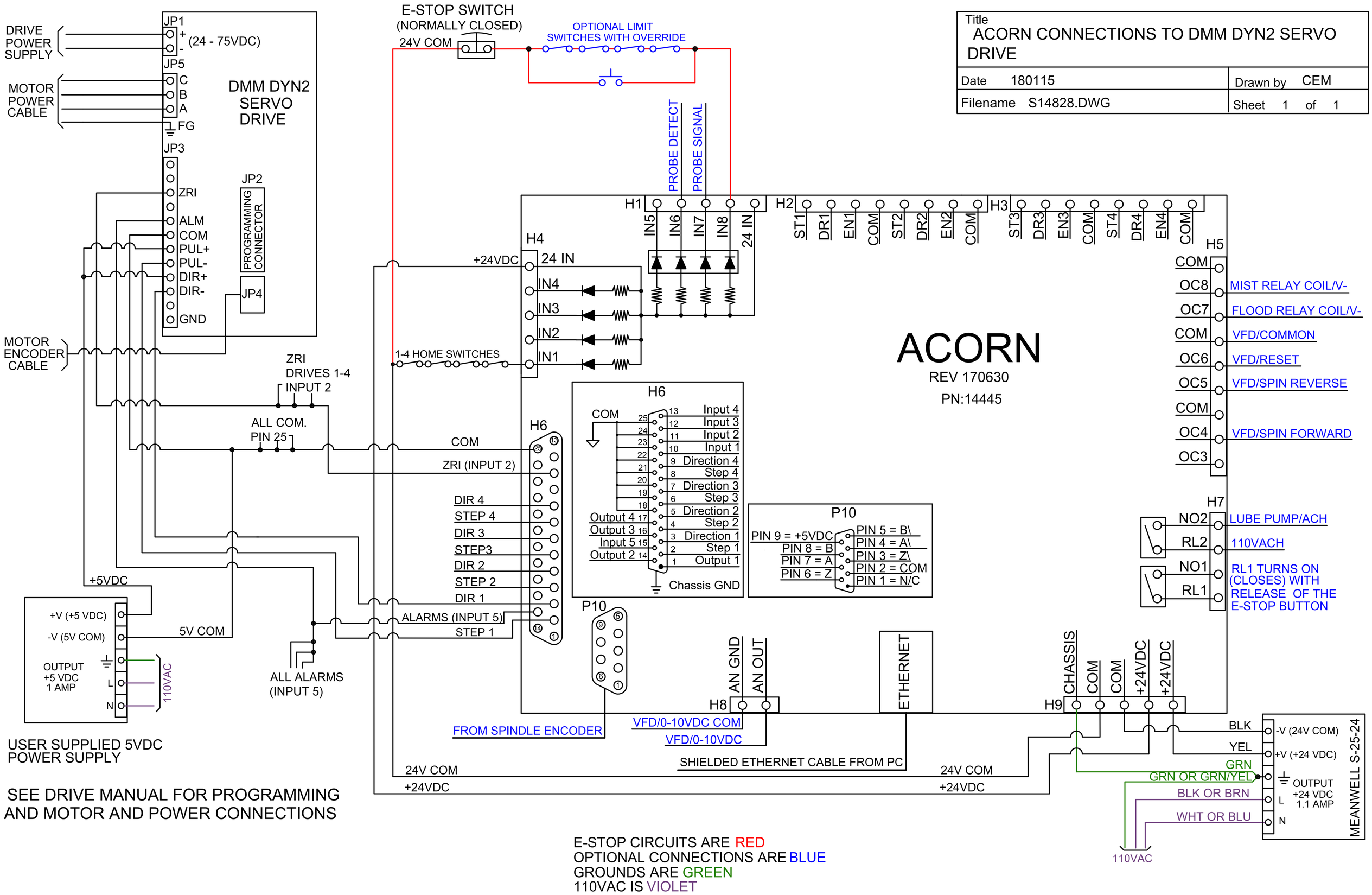

SEE DRIVE MANUAL FOR PROGRAMMING AND MOTOR AND POWER CONNECTIONS

E-STOP CIRCUITS ARE RED
OPTIONAL CONNECTIONS ARE BLUE
GROUNDS ARE GREEN
110VAC IS VIOLET