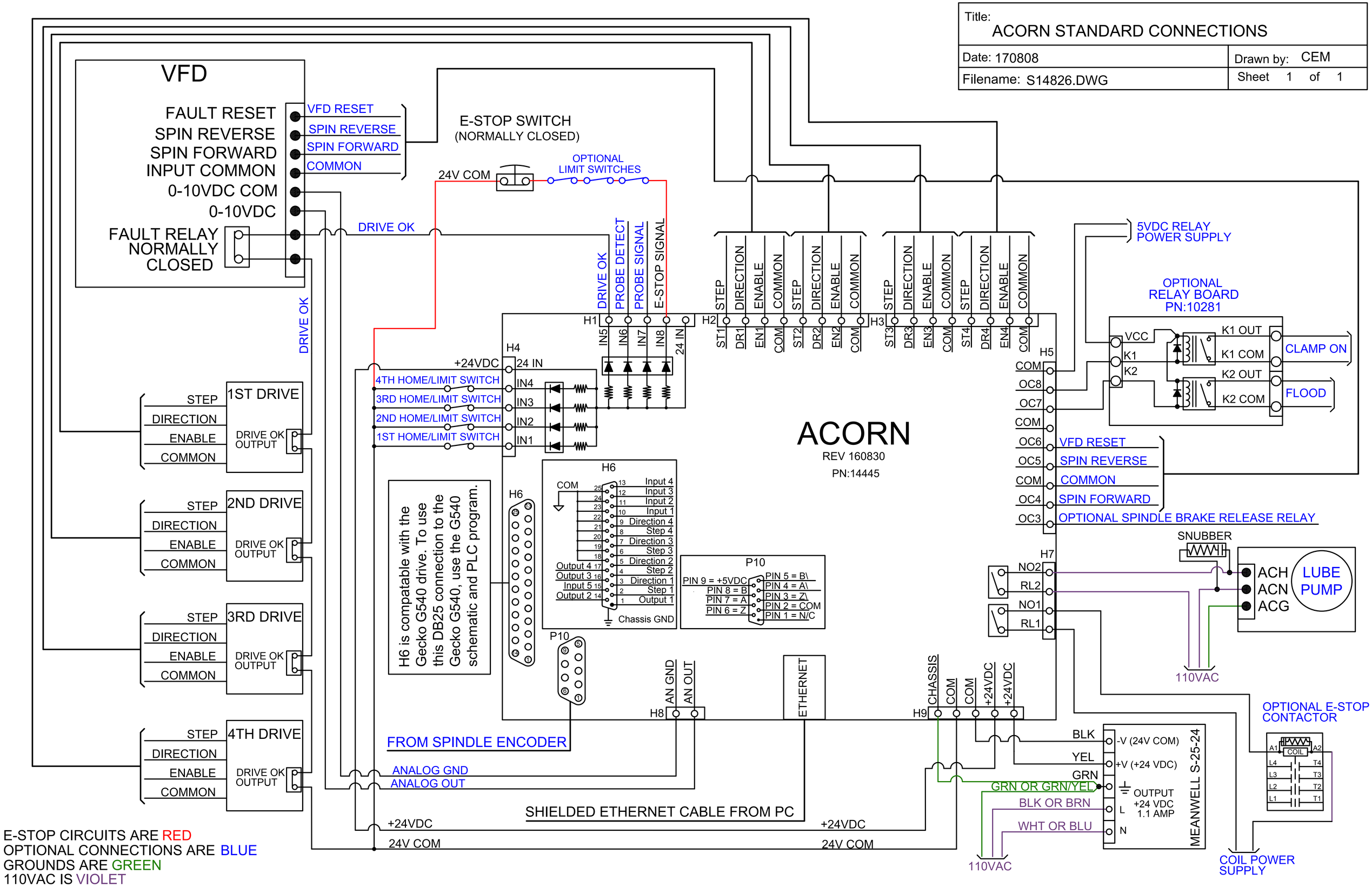

Title: ACORN STANDARD CONNECTIONS
Date: 170808
Drawn by: CEM
Filename: S14826.DWG
Sheet 1 of 1
VFD
FAULT RESET
SPIN REVERSE
SPIN FORWARD
INPUT COMMON
0-10VDC COM
0-10VDC
FAULT RELAY NORMALLY CLOSED
VFD RESET
SPIN REVERSE
SPIN FORWARD
COMMON
E-STOP SWITCH (NORMALLY CLOSED)
24V COM
OPTIONAL LIMIT SWITCHES
DRIVE OK
DRIVE OK
PROBE DETECT
PROBE SIGNAL
E-STOP SIGNAL
STEP
DIRECTION
ENABLE
COMMON
H1
H2
H3
IN5
IN6
IN7
IN8
24 IN
ST1
DR1
EN1
COM
ST2
DR2
EN2
ST3
DR3
EN3
ST4
DR4
EN4
5VDC RELAY POWER SUPPLY
OPTIONAL RELAY BOARD PN:10281
VCC
K1
K2
K1 OUT
K1 COM
K2 OUT
K2 COM
CLAMP ON
FLOOD
H4
+24VDC
24 IN
4TH HOME/LIMIT SWITCH
3RD HOME/LIMIT SWITCH
2ND HOME/LIMIT SWITCH
1ST HOME/LIMIT SWITCH
IN4
IN3
IN2
IN1
1ST DRIVE
2ND DRIVE
3RD DRIVE
4TH DRIVE
DRIVE OK OUTPUT
ACORN
REV 160830
PN:14445
H5
COM
OC8
OC7
OC6
OC5
OC4
OC3
VFD RESET
SPIN REVERSE
COMMON
SPIN FORWARD
OPTIONAL SPINDLE BRAKE RELEASE RELAY
H6
COM
Input 4
Input 3
Input 2
Input 1
Direction 4
Step 4
Direction 3
Step 3
Direction 2
Step 2
Direction 1
Step 1
Output 1
Output 4
Output 3
Input 5
Output 2
Chassis GND
P10
PIN 9 = +5VDC
PIN 8 = B
PIN 7 = A
PIN 6 = Z
PIN 5 = B\
PIN 4 = A\
PIN 3 = Z\
PIN 2 = COM
PIN 1 = N/C
H6 is compatable with the Gecko G540 drive. To use this DB25 connection to the Gecko G540, use the G540 schematic and PLC program.
H7
NO2
RL2
NO1
RL1
SNUBBER
ACH
ACN
ACG
LUBE PUMP
110VAC
AN GND
AN OUT
H8
ETHERNET
CHASSIS
COM
COM
+24VDC
+24VDC
H9
FROM SPINDLE ENCODER
ANALOG GND
ANALOG OUT
SHIELDED ETHERNET CABLE FROM PC
+24VDC
24V COM
+24VDC
24V COM
BLK
YEL
GRN
GRN OR GRN/YEL
BLK OR BRN
WHT OR BLU
-V (24V COM)
+V (+24 VDC)
OUTPUT +24 VDC 1.1 AMP
L
N
MEANWELL S-25-24
110VAC
OPTIONAL E-STOP CONTACTOR
COIL
COIL POWER SUPPLY
E-STOP CIRCUITS ARE RED
OPTIONAL CONNECTIONS ARE BLUE
GROUNDS ARE GREEN
110VAC IS VIOLET