Title: ACORN CONNECTIONS TO GENERIC VFD	
PLC Program: acorn-mill-universal.src	
Date: 170118	Drawn by: CEM
Filename: S14814.DWG	Sheet 1 of 1

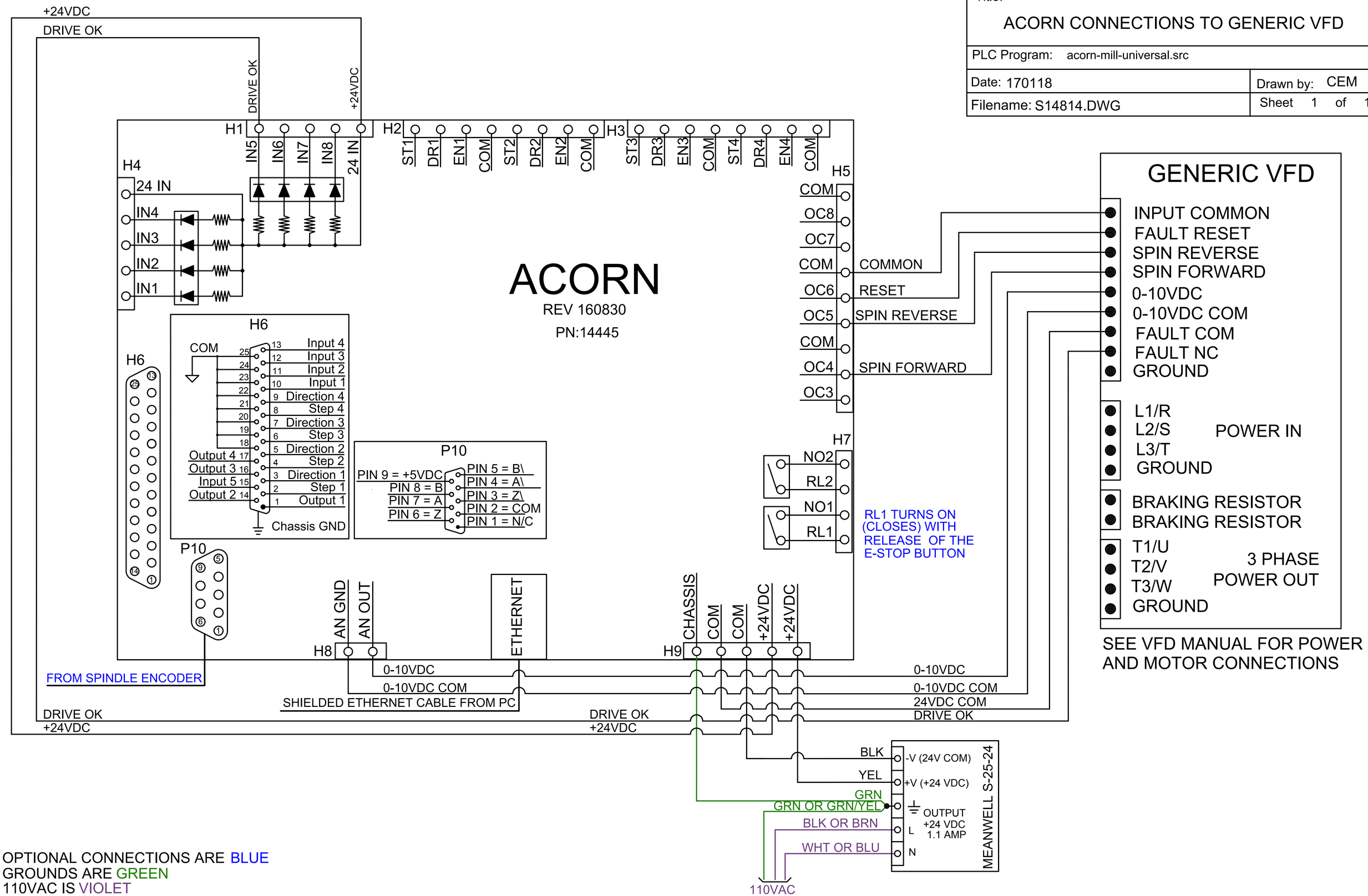

OPTIONAL CONNECTIONS ARE BLUE
GROUNDS ARE GREEN
110VAC IS VIOLET