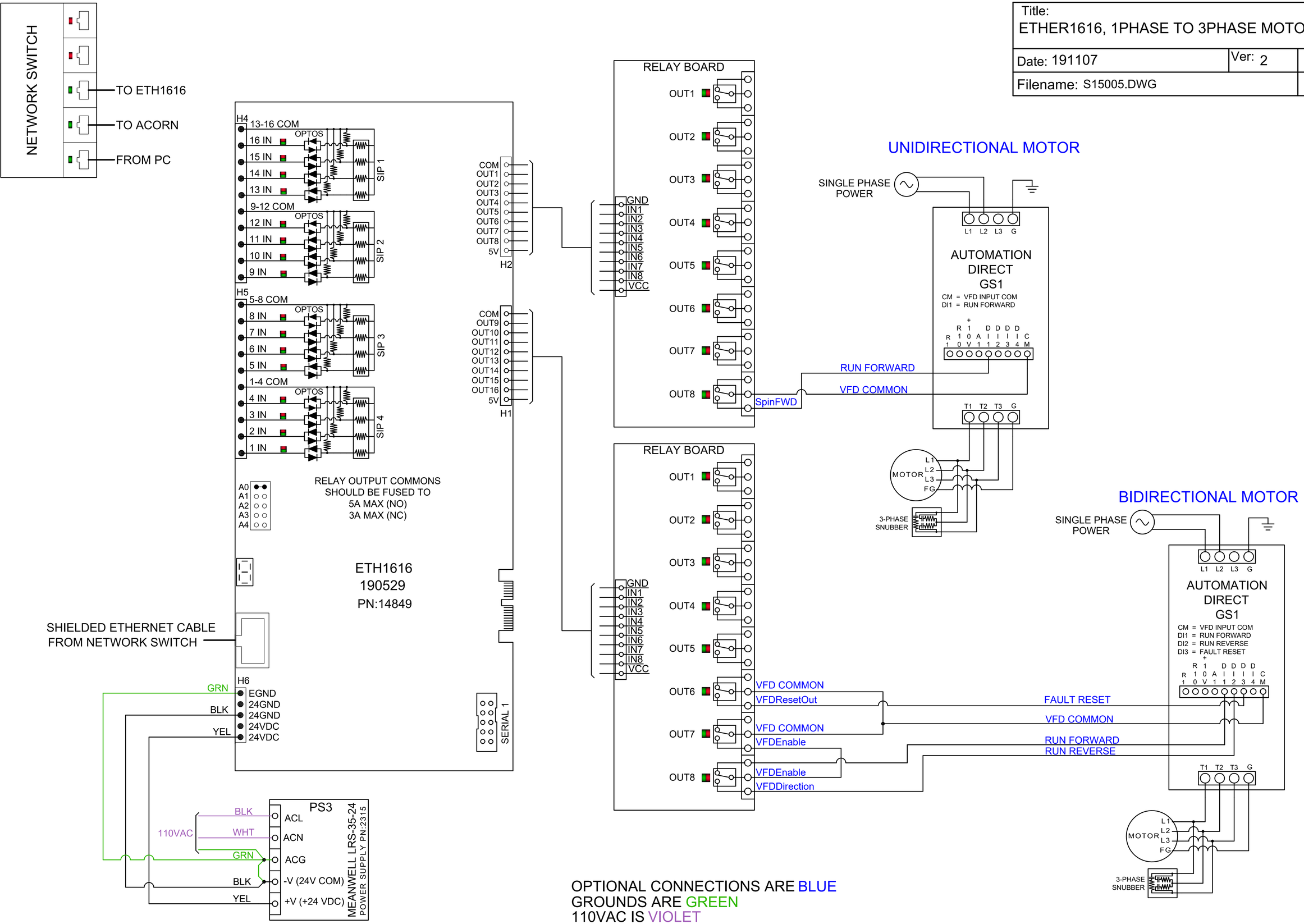Title: ETHER1616, 1PHASE TO 3PHASE MOTOR CONNECTIONS		
Date: 191107	Ver: 2	Drawn by: CEM
Filename: S15005.DWG		Sheet 1 of 1