NOTE 1

110VAC SPINDLE COOLING FAN
110H-122 BLK connects from CNT1/L1 to TB1/3A.
Wire 110H-123 BLK connects to CNT1/T1.
Wire 110N-124 WHT connects to TB1/7A.
Wires are 18 AWG

220VAC SPINDLE COOLING FAN
220-297 BLK connects from F3/LOAD to CNT1/L1. Wire 220-298 BLK connects to CNT1/T1. Wire 220-299 WHT connects to F4/LOAD.
Wires are 14 AWG

NOTE 2

110VAC LUBE PUMP
Wire 110H-126 BLK connects from TB1/2B to RELAY BOARD/OUT2 COM.
Wire 110H-127 BLK connects to RELAY BOARD/OUT2 NO.
Wire 110N-128 WHT connects to TB1/5B.
Wire GND-4 GRN connects to TB1/9B.
Wires are 18 AWG

220VAC LUBE PUMP
220-226 BLK connects from F3/LOAD to RELAY BOARD/OUT2 COM
Wire 220-227 BLK connects to RELAY BOARD/OUT2 NO.
Wire 220-228 WHT connects to F4/LOAD.
Wire GND-4 GRN connects to TB1/9B.
Wires are 14 AWG

NOTE 3

ALL CONTACTOR COILS REQUIRE A SNUBBER, EITHER CONTACTOR MANUFACTURERS RECOMMENDED SNAP ON SNUBBER OR CENTROID PN:1819 EXTERNAL QUENCHARC SNUBBER.

NOTE 4

WIRES AND CIRCUIT BREAKERS MUST BE RATED FOR THE CURRENT RATING OF THE DEVICES USED. REFER TO OWNERS MANUAL FOR SPECIFIED WIRE GAUGE AND CURRENT CAPACITY.

PART	(MFG PN:)	LOCATION
ACORN	(PN:14445)	D3-F3
AXIS DRIVES		D4-G5
CNT1	(PN:14374)	B3
CNT2	(PN:14377)	B3
DISCONNECT	(OT40F3)	B1
DISCONNECT, AUX	(OA1G10)	B1
DOOR FAN		H4
E-STOP CONNECTOR		E1
E-STOP SWITCH		D1
ETH1616		G1-H3
F1,F2,F3,F4		B1
F5		D2
FLOOD PUMP MOTOR		A3
FUSE TABLE		F6
GROUND LUG		B1
HOME SWITCHES		C6
HIGH-LOW RANGE SWITCH		A2
INVERTER		A1
LIMIT SWITCHES		E6
LUBE PUMP		A3
MIST		A3
NETWORK SWITCH		G1
NOTE 1		A2
NOTE 2		A4
NOTE 3		B2
NOTE 4		A4
OCR2	(LR2K0310)	B3
PC		B6
PROBE CABLE	(PN:11085)	F1
PS1	(RQ-65D)	F4
PS2	(LRS-35-24)	D4
PS3	(LRS-35-24)	H3
RELAY BOARD		G2-G3
SPINDLE BRAKE RELEASE		A2
SPINDLE COOLING FAN		A2
SPINDLE MOTOR		A1
T1		B4
TB1		D1,D2
Z-AXIS BRAKE RELEASE		C4,D4

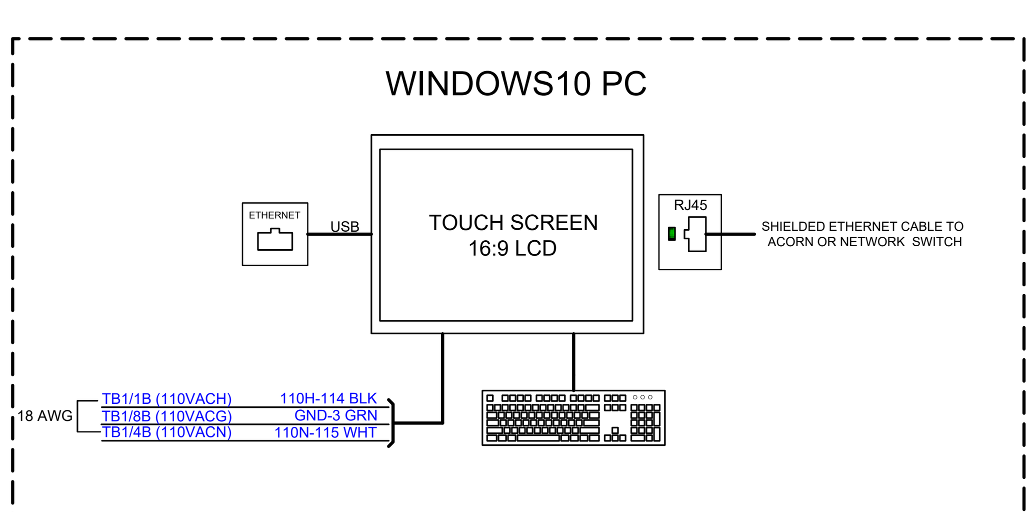

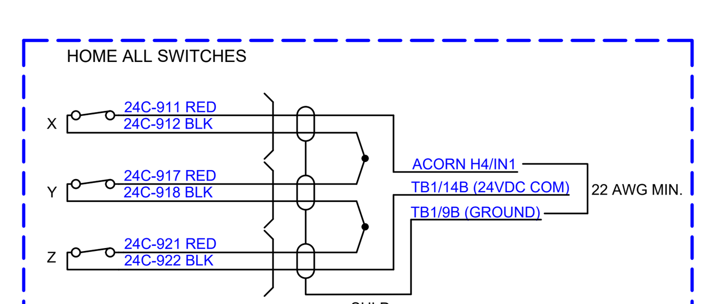

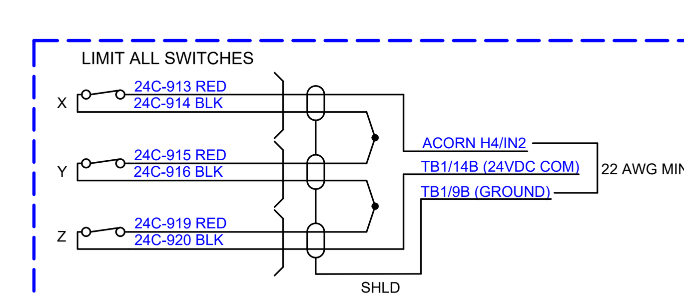

IF USING CIRCUIT BREAKERS INSTEAD OF FUSES, SEPARATE DEVICE SUPPLY CIRCUITS AND USE D CURVE CIRCUIT BREAKERS.
WE RECOMMEND THE FOLLOWING BREAKERS.

AMPERAGE	POLES	PART NUMBER (EATON)
5	1	FAZ-D5-1-NA-SP
15	1	FAZ-D15/1-NA-SP
2	2	FAZ-D2-2-NA
6	2	FAZ-D6-2-NA
10	2	FAZ-D10-2-NA
16	2	FAZ-D16-2-NA
30	2	FAZ-D30-2-NA
16	3	FAZ-D16-3-NA
32	3	FAZ-D30-3-NA
63	3	FAZ-D63-3-NA

SUGGESTED
WIRE CURRENT CAPACITY
STRANDED MTW OR EQUIVALENT

18 AWG - UP TO 6A
16 AWG - UP TO 8A
14 AWG - UP TO 15A
12 AWG - UP TO 20A
10 AWG - UP TO 30A
8 AWG - UP TO 40A
6 AWG - UP TO 60A

"NOTE" FUSE RATING DEPENDS ON SPINDLE HP

FUSE	RATING	LOCATION	CIRCUIT
F1	15ATD	B1	INCOMING SINGLE PHASE
F2	NOTE	B1	INCOMING 3 PHASE
F3	NOTE	B1	INCOMING 3 PHASE
F4	NOTE	B1	INCOMING 3 PHASE
F5	5ATD	D3	24VAC

E-STOP CONNECTIONS ARE SHOWN IN RED
OPTIONAL CONNECTIONS ARE SHOWN IN BLUE
GROUND CONNECTIONS ARE SHOWN IN GREEN
110VAC CONNECTIONS ARE SHOWN IN VIOLET
3 PHASE CONNECTIONS ARE SHOWN IN ORANGE
24VAC CONNECTIONS ARE SHOWN IN BROWN

REV	DATE	DESCRIPTION	BY
1	11-07-2019	INITIAL RELEASE	CEM
2	04-07-2020	WIRE LABEL AND INDEX CORRECTIONS	CEM

CENTROID (814) 353-9256 www.centroidcnc.com
Copyright © 2019 Centroid

Title: Mill, 220/110VAC, ACORN, Generic Drives, Inverter (VFD)

Size D | Number | Rev 2

Date: 191107 | Drawn by CEM

Filename: S15010.DWG | Sheet 1 of 1