Title: ACORN_rev4, LIMIT/HOME NPN PROXIMITY SENSORS		
Date: 210420	Ver: 3	Drawn by: CEM
Filename: S14955.DWG		Sheet 1 of 1

How to tell the difference between Acorn_rev2, Acorn_rev3 and Acorn_rev4
Acorn_rev2 has FIXED green screw terminal blocks
Acorn_rev3 has REMOVABLE green screw terminal blocks
Acorn_rev4 has LED indicators for the Inputs and Outputs

ACORN I/O	1	2	3	4
INPUTS	FirstAxisHomeLimitOk	SecondAxisHomeLimitOk	ThirdAxisHomeLimitOk	
OUTPUTS				
ACORN I/O	5	6	7	8
INPUTS				EStopOK
OUTPUTS				

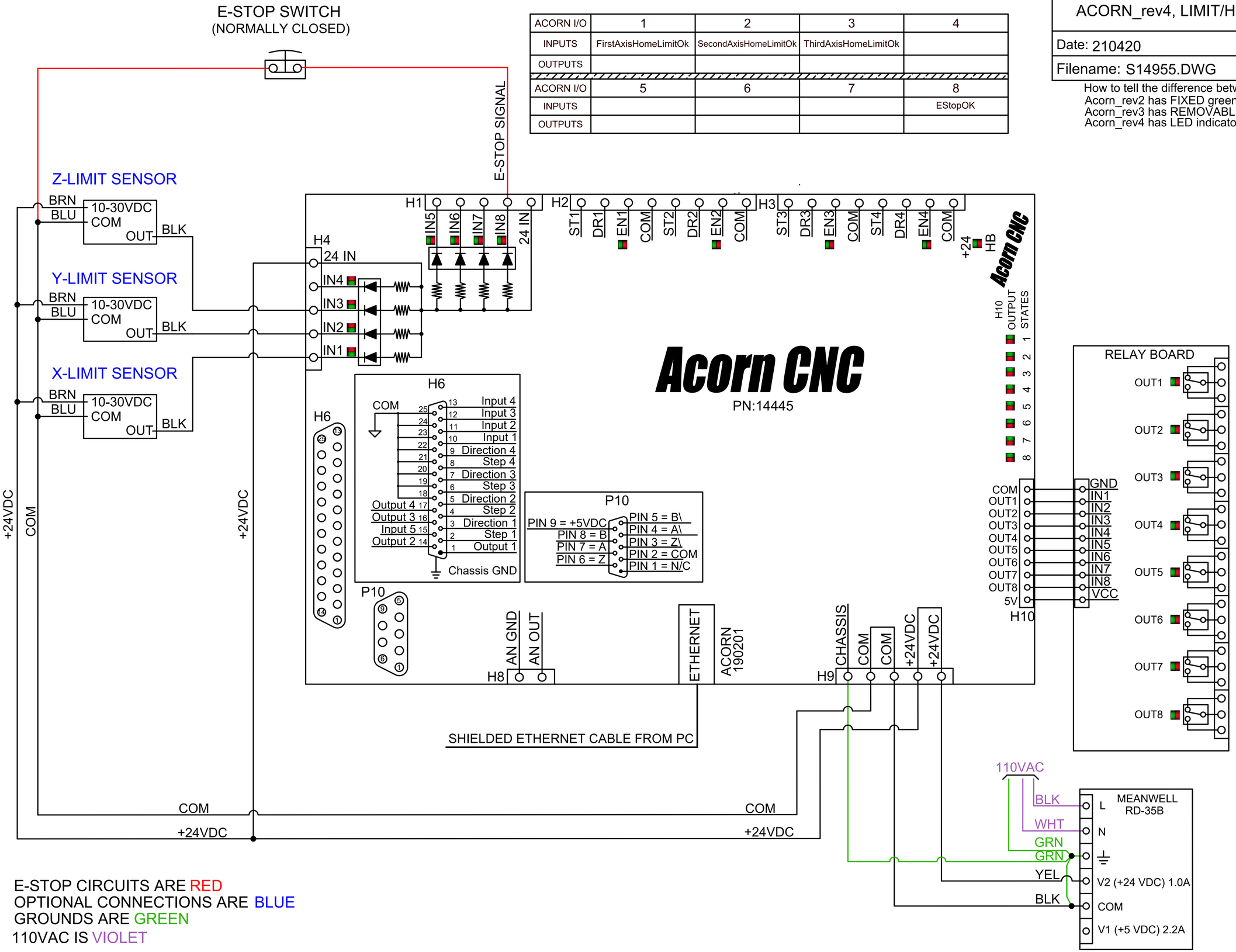

E-STOP CIRCUITS ARE RED
OPTIONAL CONNECTIONS ARE BLUE
GROUNDS ARE GREEN
110VAC IS VIOLET