Title:	ACORN_rev4, EMCO PC55, 2 SENSOR TURRET LATHE, STANDARD CONNECTIONS	
Date: 210420	Ver: 2	Drawn by: CEM
Filename: S14986.DWG		Sheet 1 of 1

How to tell the difference between Acorn_rev2, Acorn_rev3 and Acorn_rev4
Acorn_rev2 has FIXED green screw terminal blocks
Acorn_rev3 has REMOVABLE green screw terminal blocks
Acorn_rev4 has LED indicators for the Inputs and Outputs
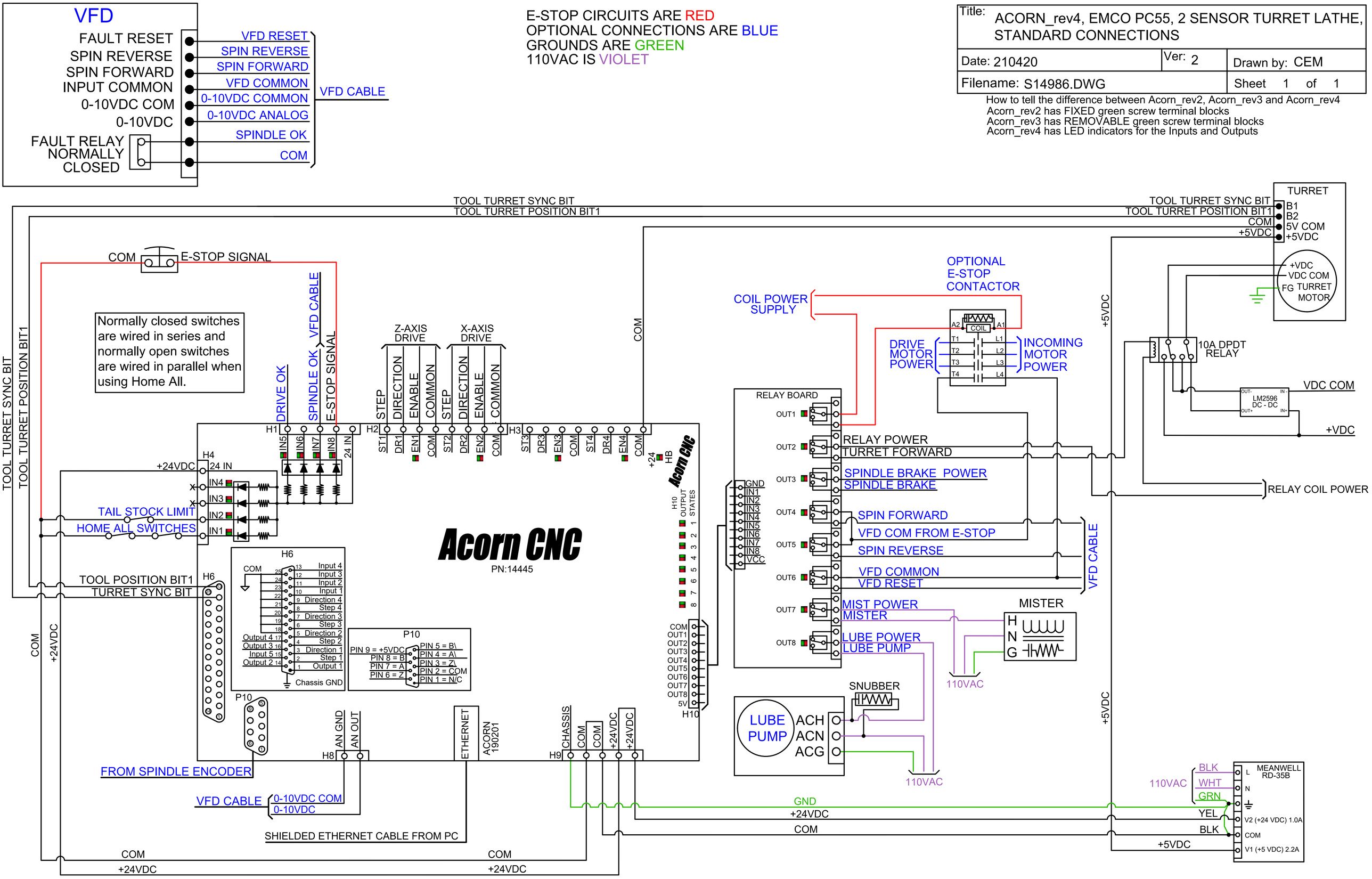
E-STOP CIRCUITS ARE RED
OPTIONAL CONNECTIONS ARE BLUE
GROUNDS ARE GREEN
110VAC IS VIOLET