Title:	ACORN_rev4, ESTUN PRONET SERVO DRIVE (See S14965.DWG for ESTUN PRONET-E)	
Date: 210420	Ver: 4	Drawn by: CEM
Filename: S14966.DWG		Sheet 1 of 1

How to tell the difference between Acorn_rev2, Acorn_rev3 and Acorn_rev4
Acorn_rev2 has FIXED green screw terminal blocks
Acorn_rev3 has REMOVABLE green screw terminal blocks
Acorn_rev4 has LED indicators for the Inputs and Outputs

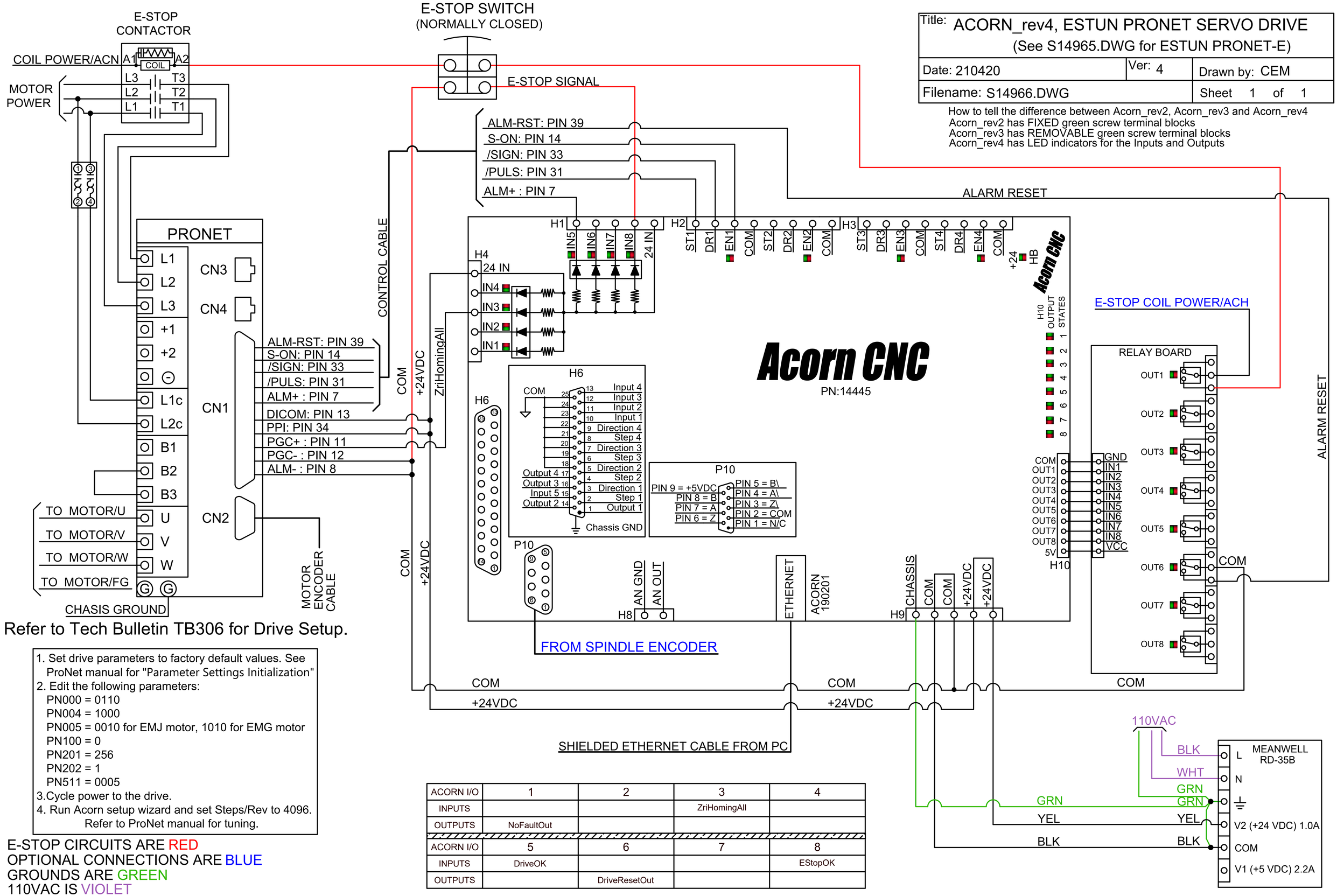

Refer to Tech Bulletin TB306 for Drive Setup.

1. Set drive parameters to factory default values. See ProNet manual for "Parameter Settings Initialization"
2. Edit the following parameters:
   PN000 = 0110
   PN004 = 1000
   PN005 = 0010 for EMJ motor, 1010 for EMG motor
   PN100 = 0
   PN201 = 256
   PN202 = 1
   PN511 = 0005
3. Cycle power to the drive.
4. Run Acorn setup wizard and set Steps/Rev to 4096. Refer to ProNet manual for tuning.

E-STOP CIRCUITS ARE RED
OPTIONAL CONNECTIONS ARE BLUE
GROUNDS ARE GREEN
110VAC IS VIOLET

ACORN I/O	1	2	3	4
INPUTS			ZriHomingAll	
OUTPUTS	NoFaultOut			

ACORN I/O	5	6	7	8
INPUTS	DriveOK			EStopOK
OUTPUTS		DriveResetOut		