ACORN I/O	1	2	3	4
INPUTS	HomeAll	LimitAll		
OUTPUTS	NoFaultout	Lubepump	SpindleBrakeRelease	SpinFWD
ACORN I/O	5	6	7	8
INPUTS	DriveOK		SpindleOK	EStopOK
OUTPUTS	SpinREV	VFDResetOut	Flood	Axis#BrakeRelease

Title: ACORN_rev4, STANDARD CONNECTIONS, AXIS BRAKE RELEASE

Date: 210420 | Ver: 3 | Drawn by: CEM

Filename: S15007.DWG | Sheet 1 of 1

How to tell the difference between Acorn_rev2, Acorn_rev3 and Acorn_rev4
Acorn_rev2 has FIXED green screw terminal blocks
Acorn_rev3 has REMOVABLE green screw terminal blocks
Acorn_rev4 has LED indicators for the Inputs and Outputs

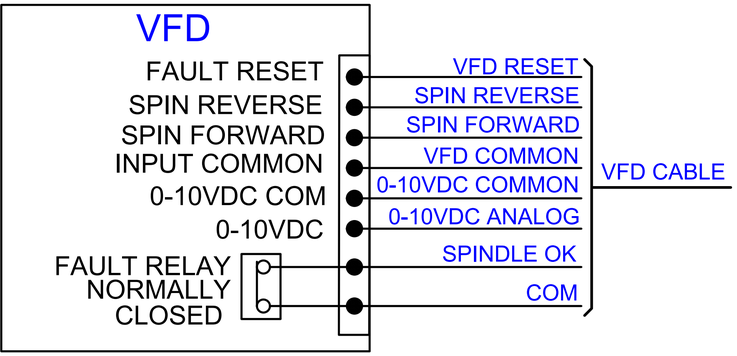

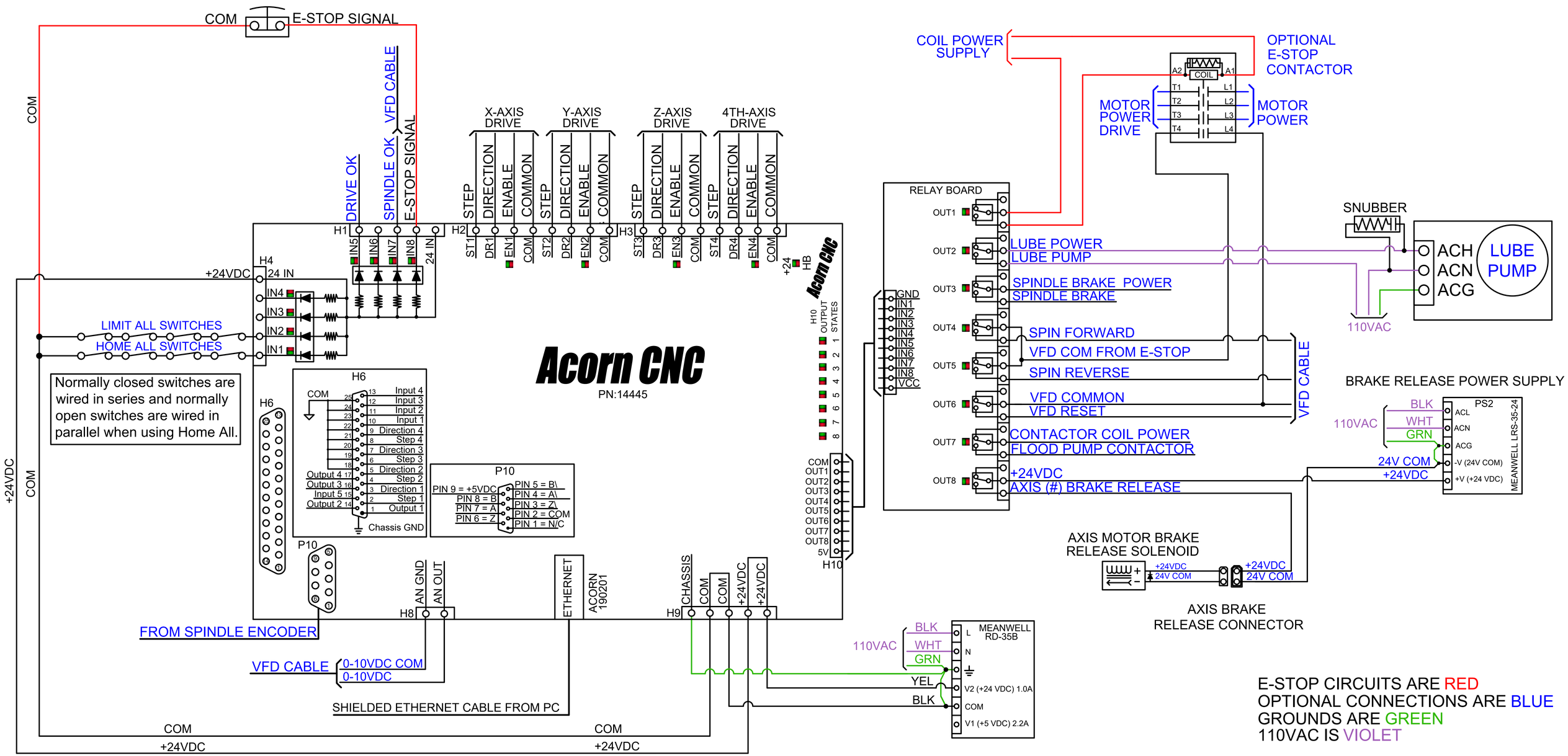

E-STOP CIRCUITS ARE RED
OPTIONAL CONNECTIONS ARE BLUE
GROUNDS ARE GREEN
110VAC IS VIOLET