Always follow this schematic and the online bench test installation videos BEFORE making any other connections.
www.centroidcnc.com/centroid_diy/acorn_quick_start_guide.html

Title: ACORN_rev4, BASIC POWER AND COMMUNICATION CONNECTIONS, Bench Test		
Date: 210420	Ver: 3	Drawn by: CEM
Filename: S14952.DWG		Sheet 1 of 1
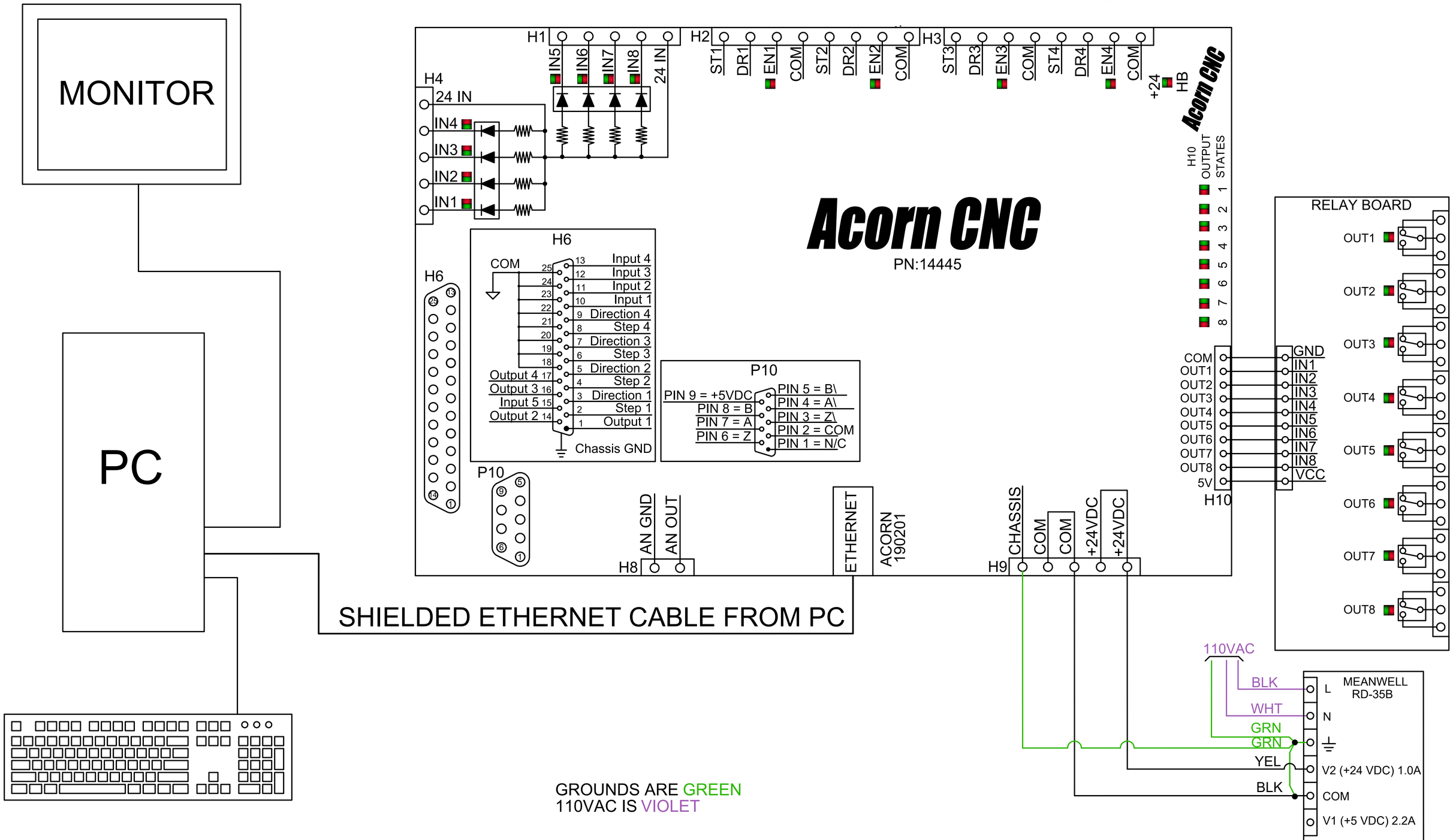
How to tell the difference between Acorn_rev2, Acorn_rev3 and Acorn_rev4
Acorn_rev2 has FIXED green screw terminal blocks
Acorn_rev3 has REMOVABLE green screw terminal blocks
Acorn_rev4 has LED indicators for the Inputs and Outputs