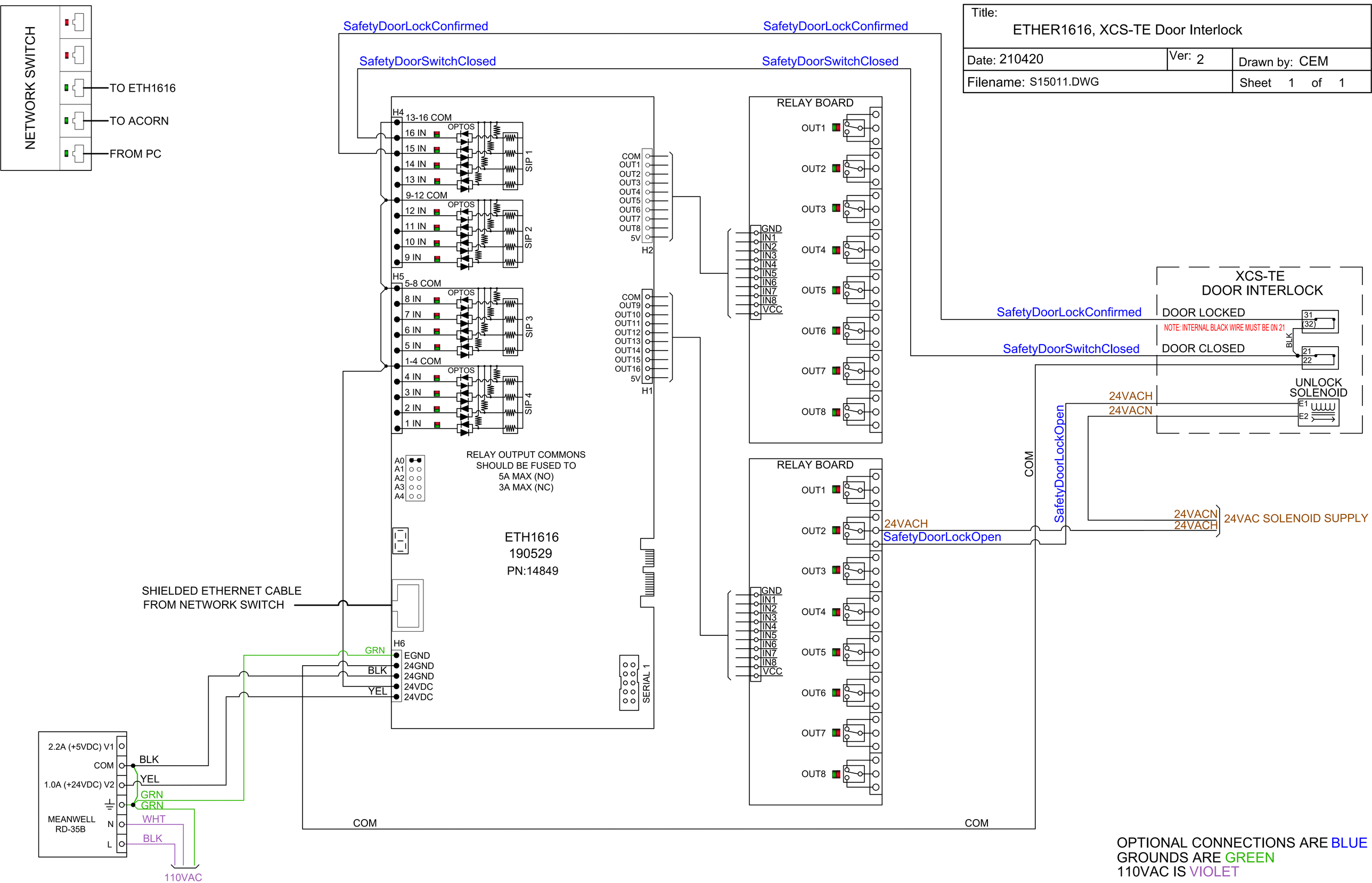
Title:
ETHER1616, XCS-TE Door Interlock
Date: 210420
Ver: 2
Drawn by: CEM
Filename: S15011.DWG
Sheet 1 of 1
NETWORK SWITCH
TO ETH1616
TO ACORN
FROM PC
SafetyDoorLockConfirmed
SafetyDoorSwitchClosed
H4
13-16 COM
16 IN
15 IN
14 IN
13 IN
9-12 COM
12 IN
11 IN
10 IN
9 IN
H5
5-8 COM
8 IN
7 IN
6 IN
5 IN
1-4 COM
4 IN
3 IN
2 IN
1 IN
OPTOS
SIP 1
SIP 2
SIP 3
SIP 4
A0
A1
A2
A3
A4
RELAY OUTPUT COMMONS
SHOULD BE FUSED TO
5A MAX (NO)
3A MAX (NC)
ETH1616
190529
PN:14849
SHIELDED ETHERNET CABLE
FROM NETWORK SWITCH
H6
EGND
24GND
24GND
24VDC
24VDC
GRN
BLK
YEL
SERIAL 1
COM
OUT1
OUT2
OUT3
OUT4
OUT5
OUT6
OUT7
OUT8
5V
H2
OUT9
OUT10
OUT11
OUT12
OUT13
OUT14
OUT15
OUT16
H1
GND
IN1
IN2
IN3
IN4
IN5
IN6
IN7
IN8
VCC
RELAY BOARD
OUT1
OUT2
OUT3
OUT4
OUT5
OUT6
OUT7
OUT8
RELAY BOARD
OUT1
OUT2
OUT3
OUT4
OUT5
OUT6
OUT7
OUT8
24VACH
SafetyDoorLockOpen
COM
XCS-TE
DOOR INTERLOCK
DOOR LOCKED
NOTE: INTERNAL BLACK WIRE MUST BE ON 21
DOOR CLOSED
BLK
31
(32)
21
22
UNLOCK
SOLENOID
E1
E2
24VACH
24VACN
24VACN
24VACH
24VAC SOLENOID SUPPLY
2.2A (+5VDC) V1
COM
1.0A (+24VDC) V2
MEANWELL
RD-35B
N
L
BLK
YEL
GRN
GRN
WHT
BLK
110VAC
COM
COM
OPTIONAL CONNECTIONS ARE BLUE
GROUNDS ARE GREEN
110VAC IS VIOLET