Title: ETHER1616, XCS-TE Door Interlock

Date: 191107	Ver: 1	Drawn by: CEM
Filename: S15011.DWG		Sheet 1 of 1

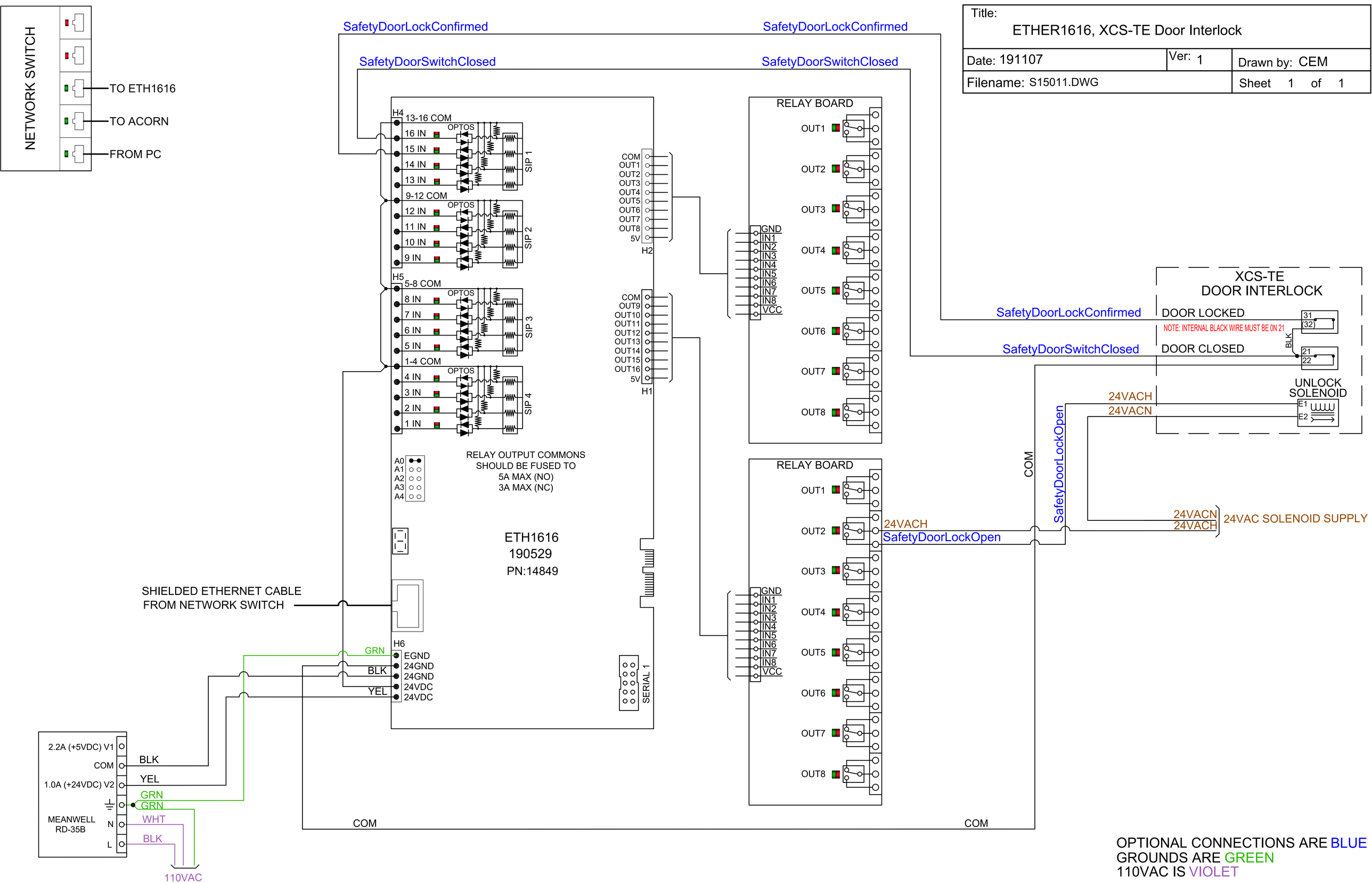

OPTIONAL CONNECTIONS ARE BLUE
GROUNDS ARE GREEN
110VAC IS VIOLET