CENTROID™

Acorn CNC12
Ether1616

Centroid Acorn Ether1616 Setup Guide

CNC Software version: CNC12 V.4.20+
Models: Acorn CNC

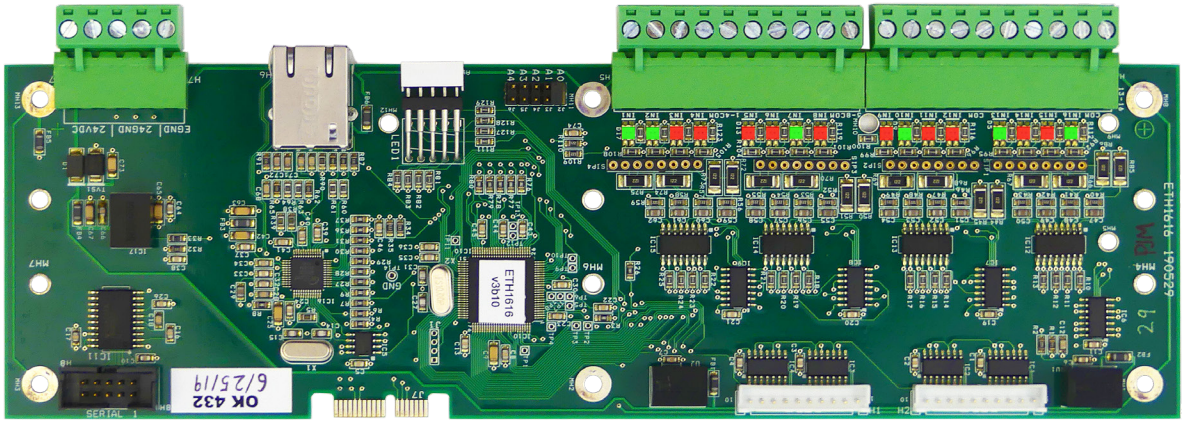

Ether1616 Kit 2

Power and Communication Overview 3

Order and Address assignments 4

Input Voltage Selection 5

Input Wiring Examples 7

Outputs 14

Setup Wizard 25

PLC diagnostic screen 38

Custom Programming 41

Ether1616 Kit

The Ether1616 is used to add additional inputs and outputs to an Acorn CNC controller. Each Ether1616 board adds an additional 16 optically isolated inputs and 16 relay isolated outputs to the system, up to three Ether1616 boards can be added to an Acorn system for a total of 56 inputs and 56 outputs. Three different input voltages can be used: 5 volts, 12 volts and 24 volt. Input voltages are mix and match capable and are selectable via bank of four of inputs at a time with the provided plug-in SIP (Single In-line Pack) resistors. The default input voltage is 24 VDC.

Both the Ether1616 and Relay 8 modules provide both Din Rail mounting holes and Standoff mounting holes to allow the DIY installer a wide variety of mounting possibilities.

The provided dedicated power supply is sized properly to provide enough power to drive the 16 relays.
There are indicator LED's on Ether1616 Inputs and on the Relay 8 Modules that indicate the state of the Inputs and Outputs.

The Ether1616 as the name implies communicates with the Centroid CNC12 software via Ethernet.

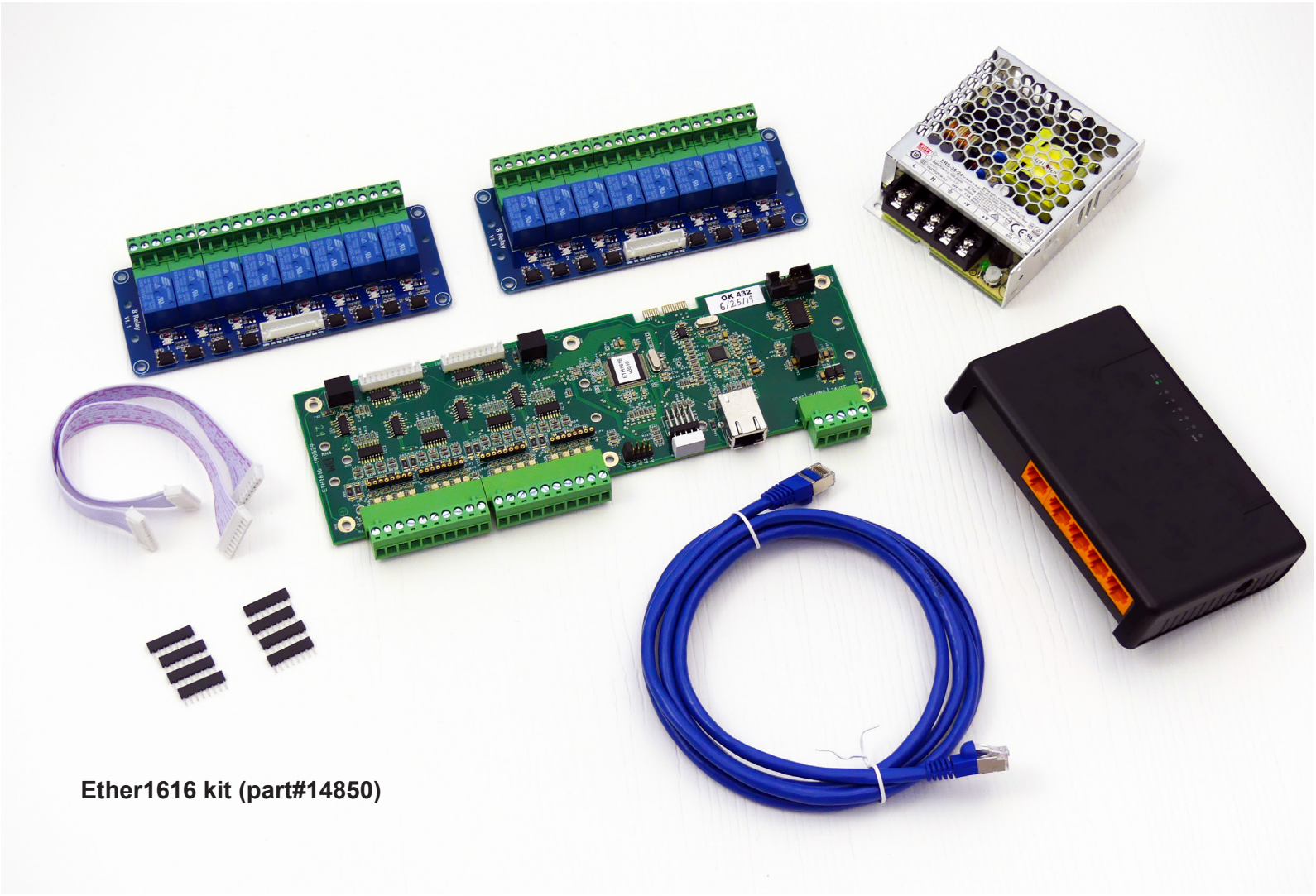

Ether1616 kit (part#14850)

1.) Ether1616 Board
2.) Qty 2 Relay 8 Modules
3.) Qty 2 Keyed Ribbon Cables
4.) 24 volt DC power supply
5.) Ethernet Switch
6.) Qty. 2 Shielded Ethernet cables
7.) Qty 4 220 Ohm SIP resistors for 5 volt input
8.) Qty. 4 1k Ohm SIP resistors for 12 volt input

* 24 volt Input is default value no SIP required for 24 volt input

Ether1616 Power and Communication Connection Overview

CNCPC running Centroid CNC12 Software

Relay 8 Module

Ether1616

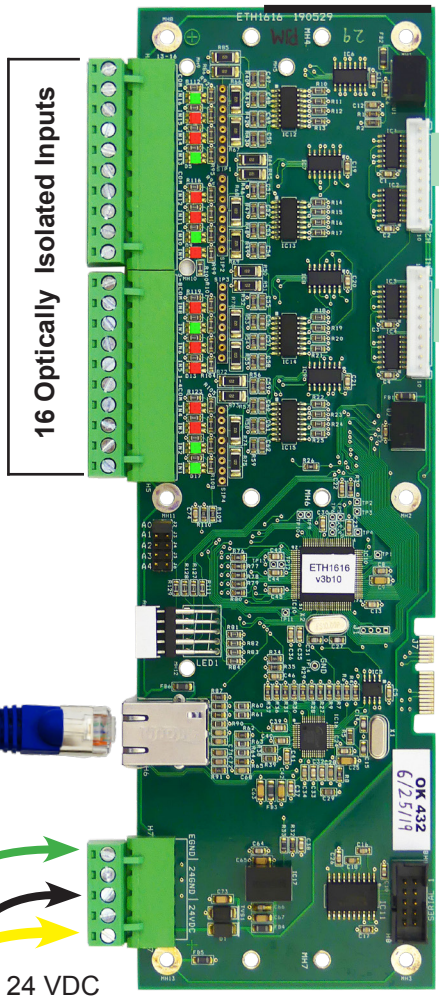

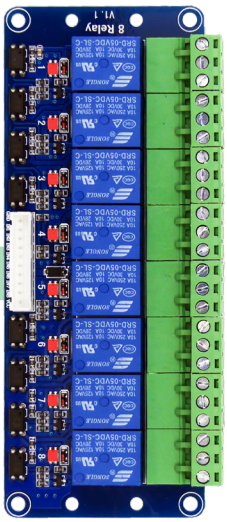

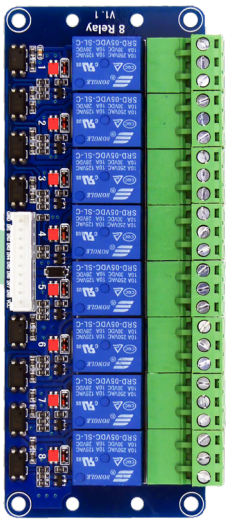

Ethernet Switch

Shielded RJ45 cable

24 VDC

Acorn CNC controller

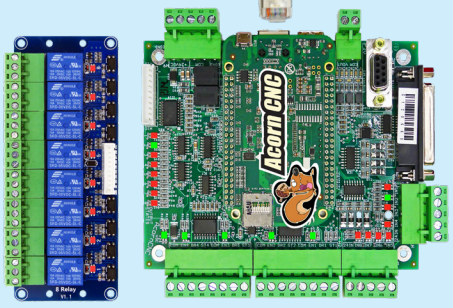

World Power
Accepts 50/60 Hz
100-120 or 200-240 VAC

Ether1616 Ethernet communication and board order setup

A maximum of three Ether1616 boards can be connected to an Acorn CNC control system. Each Ether1616 connected to a CNCPC via the Ethernet switch will have its own static Ethernet address. Each Ether1616 particular address is determined by the Address Jumper located on the Ether1616 board. The user selects which Ether1616 board in the system is the first, second and third by setting the Address Jumper to A0,A1 or A2. A0 = First Ether1616, A1= Second Ether1616, A2 = Third Ether1616.

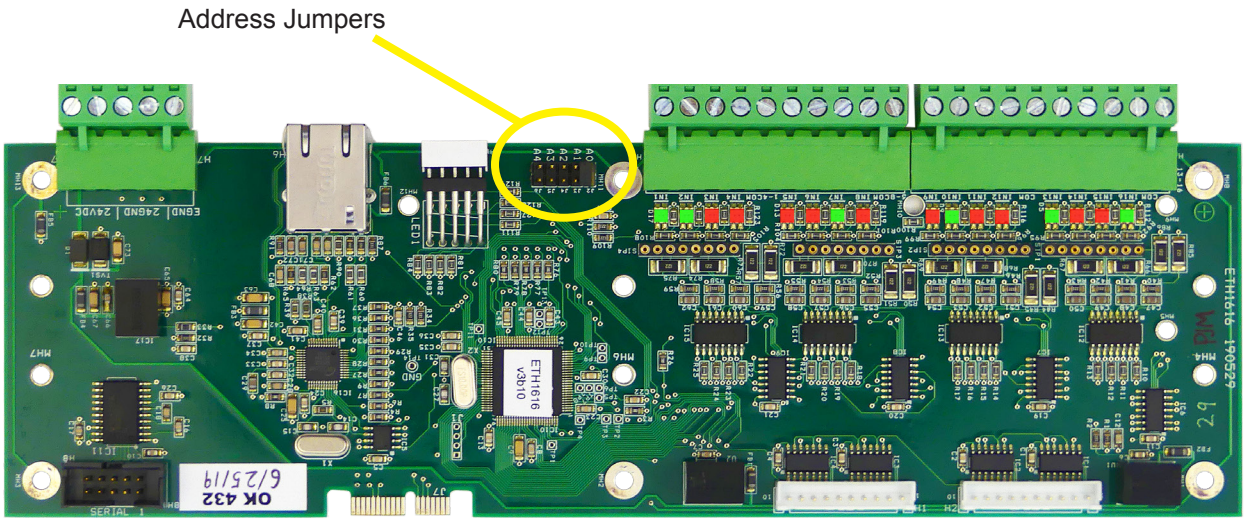

Set the Address Jumpers on each Ether1616 being used in the Acorn system

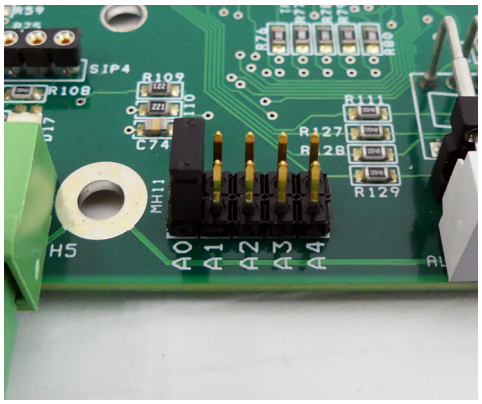

A0 = First Ether1616

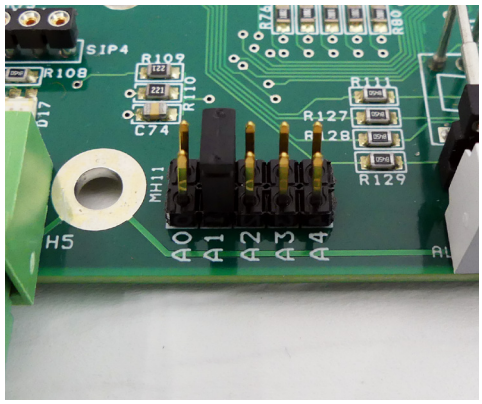

A1= Second Ether1616

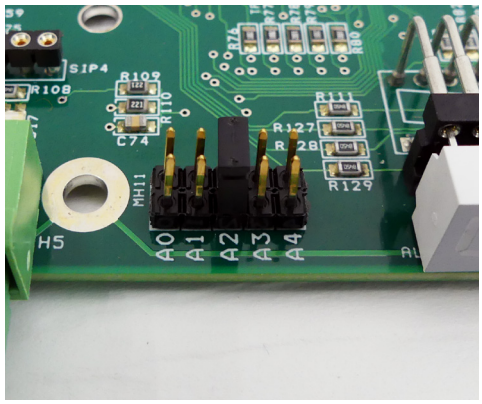

A2 = Third Ether1616

Only one jumper block on A0, A1, or A2 must be used. This allows for up to three ETH1616 boards to be used with ACORN. The first Ether1616 connected to a CNCPC has a static Ethernet address of 10.168.41.3 denoted by A0 on the Address Jumper block (A0 = Address Zero, which is the address for the first Ether1616 board in the system). Each Ether1616 must have its own Address Jumper setting (do not reuse the same address jumper setting on another board).

First Ether1616 connected to the system	A0 address = 10.168.41.3
Second Ether1616 connected to the system	A1 address = 10.168.41.4
Third Ether1616 connected to the system	A2 address = 10.168.41.6

These addresses will automatically be identified by CNC12 and the Acorn Wizard so no further action is typically needed on the CNCPC/CNC12 software end of things.

(The Ether1616 can also be used in applications independent of the Acorn CNC controller, in these cases the addresses A3, and A4 can be used. See the Ether1616 specification manual at end of this document for more information)

Ether1616 Input Voltage selection

Ether1616 has 16 optically isolated inputs. The inputs are divided into banks of four. Each bank is configurable for various voltages and sinking or sourcing polarity. Voltage may be selected by installing the appropriate value resistor pack or SIP into a socket for each bank. Without a SIP installed, input voltage is set to 24V. The provided SIPs may be installed to use 12V or 5V input voltage. Polarity is determined by wiring the common terminal for the bank to the supply positive or supply common.

Single In-line Pack (SIP) Resistor Sockets

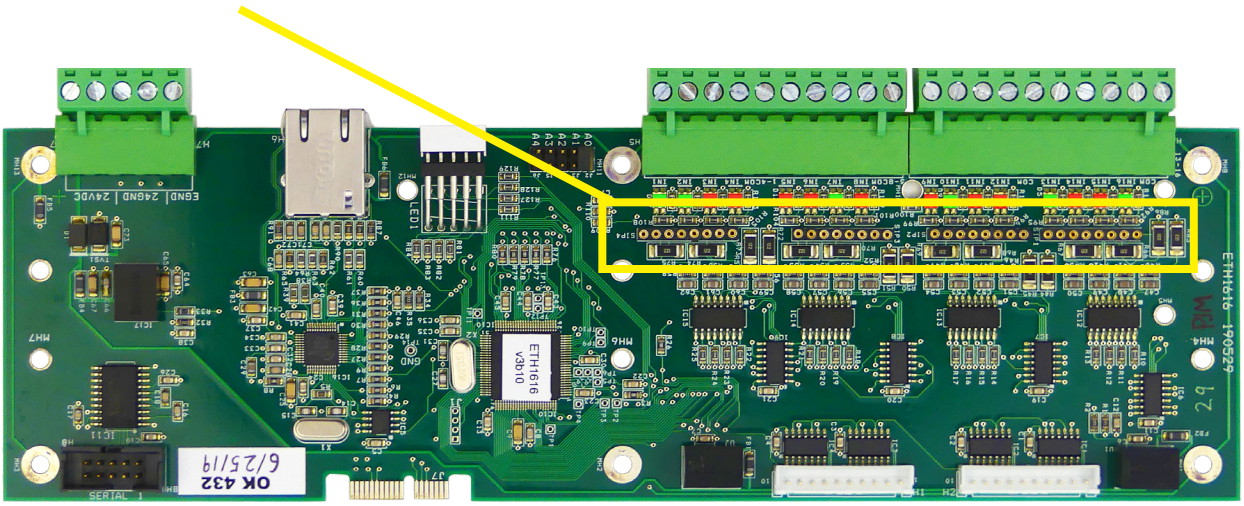

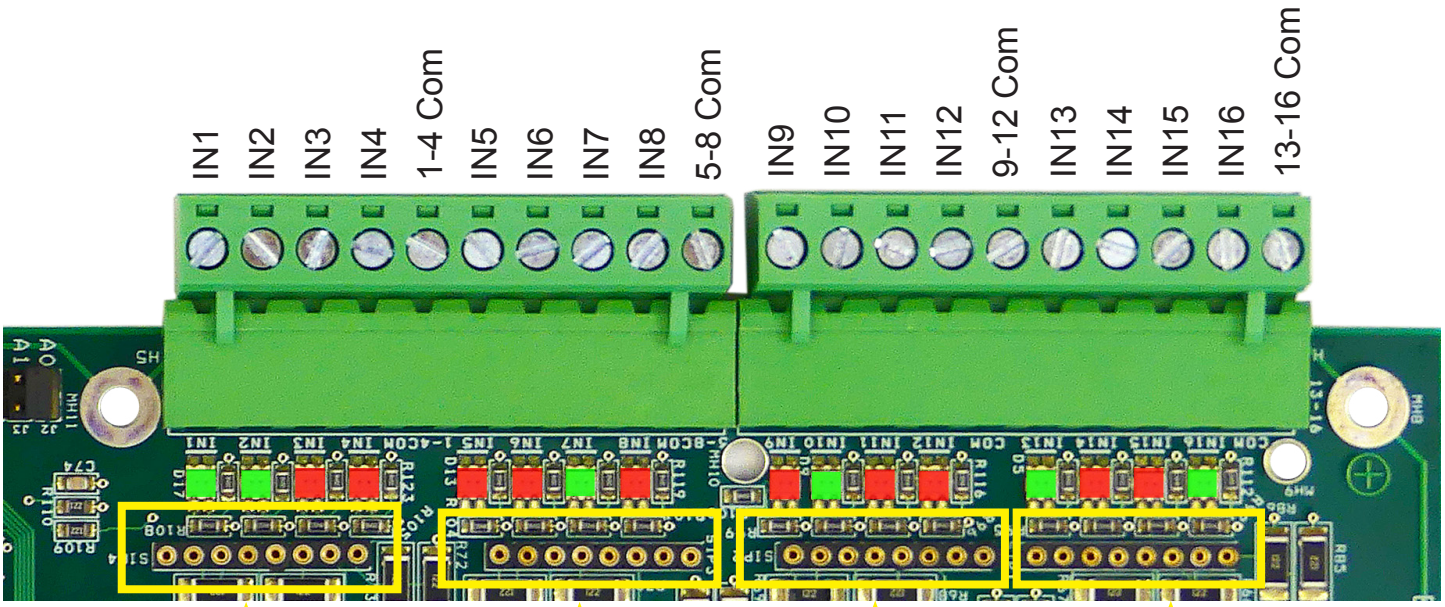

Ether1616 Input Voltage selection with the SIP resistors

Examples

Setup for 24 volt Inputs

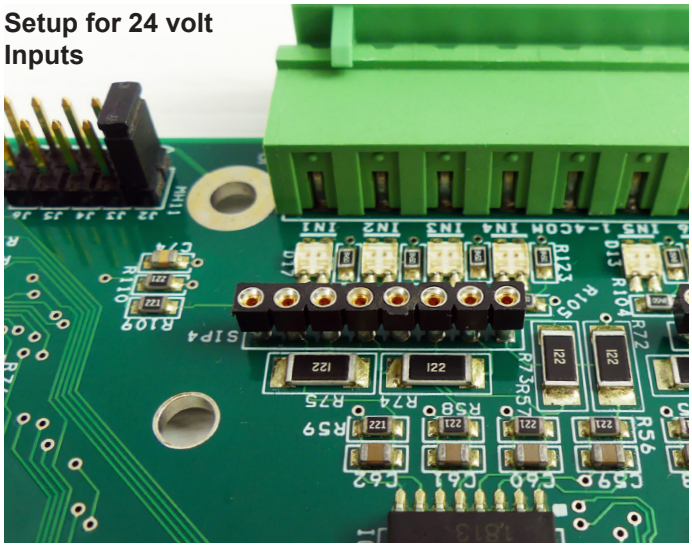

SIP socket for inputs 1-4 setup for 24 volt input operation. No resistors are used for 24 volt inputs

Setup for 12 volt Inputs

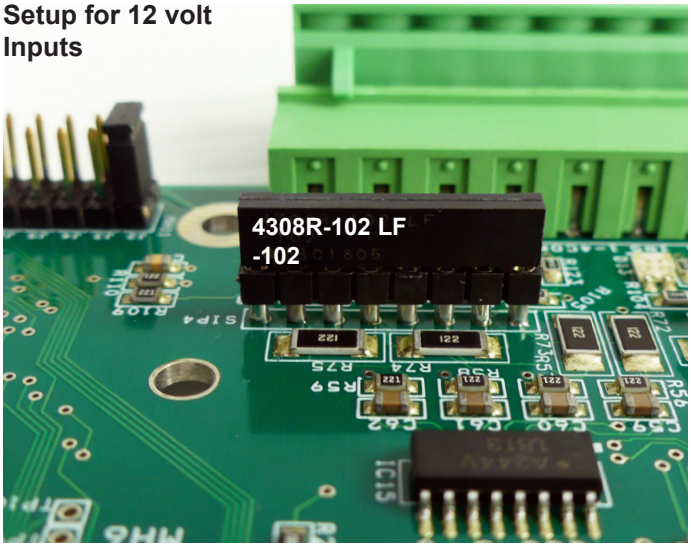

SIP socket for inputs 1-4 setup for 12 volt input operation. Use SIP resistor “102”

4308R-102 LF -102

“102” = 1.0K Ohm SIP resistor

Setup for 5 volt Inputs

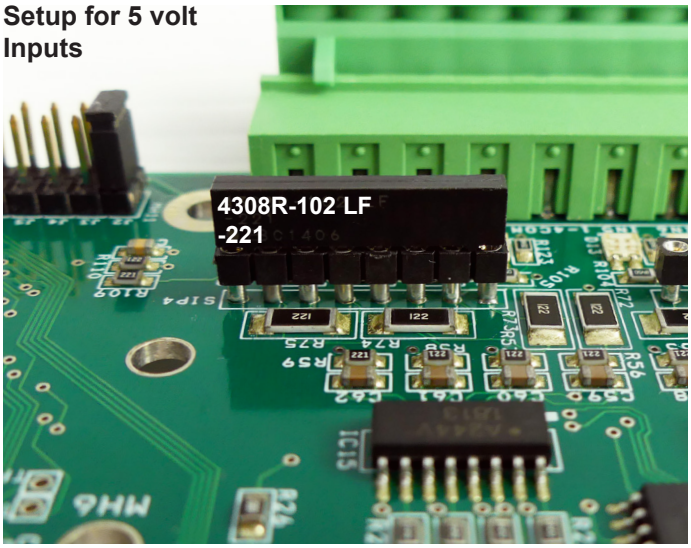

SIP socket for inputs 1-4 setup for 5 volt input operation. Use SIP resistor “221”

4308R-102 LF - 221

221 = a 220 Ohm SIP resistor

Ether1616 Input Wiring

24 VDC NC limit switch “Sinking” wiring example

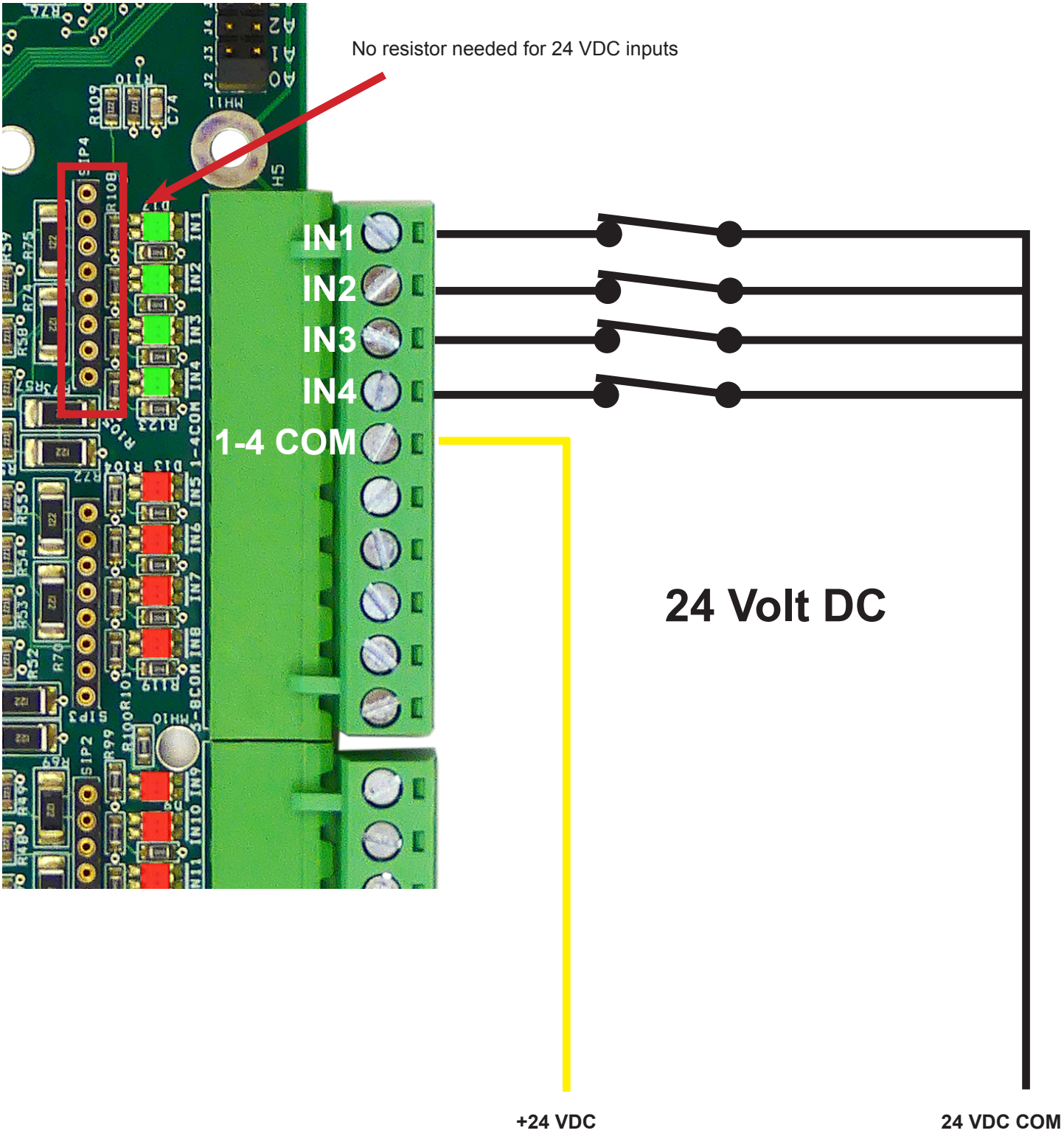

Ether1616 Input Wiring

12 VDC NC limit switch “Sinking” wiring example

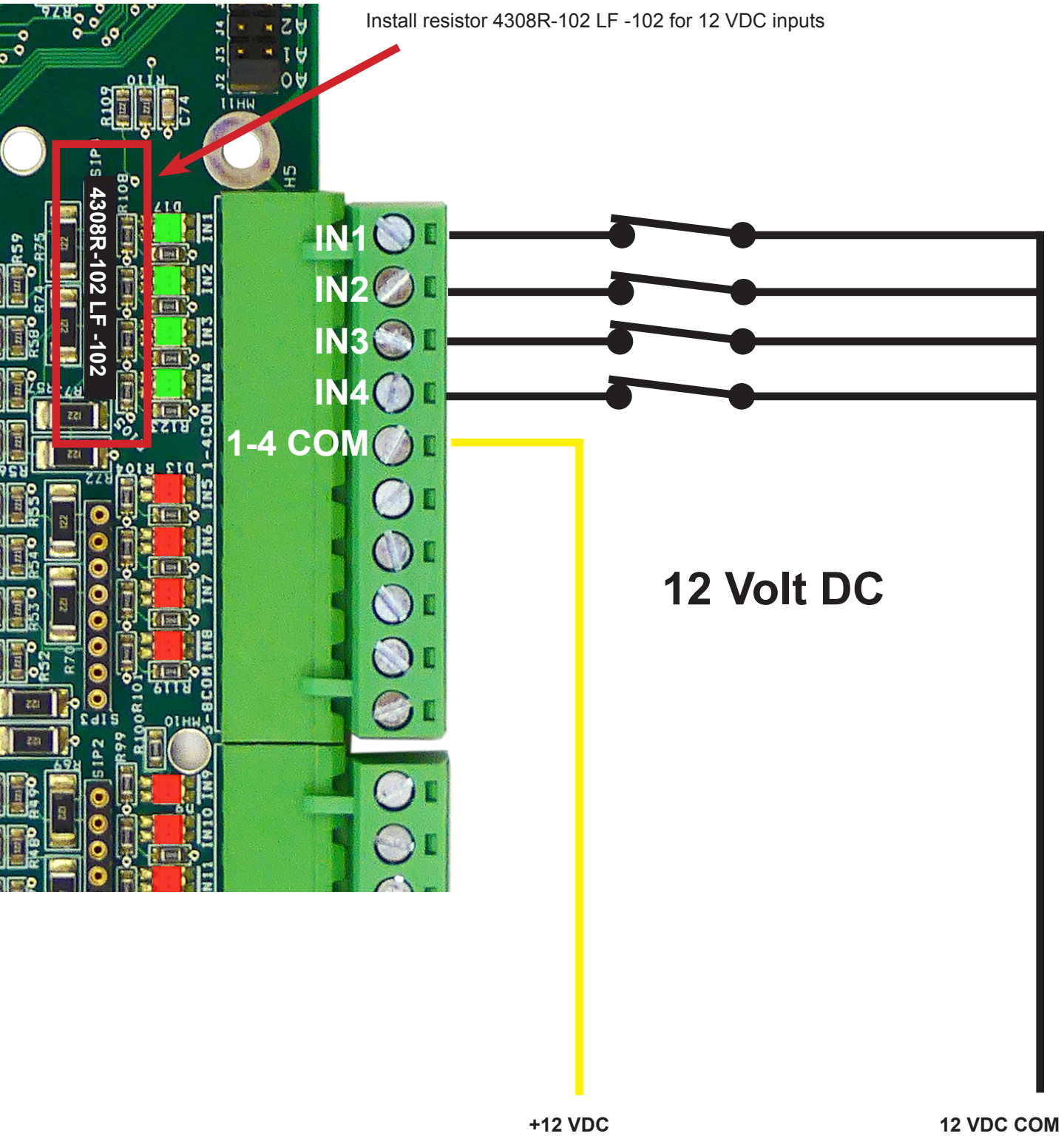

Ether1616 Input Wiring

5 VDC NC limit switch “Sinking” wiring example

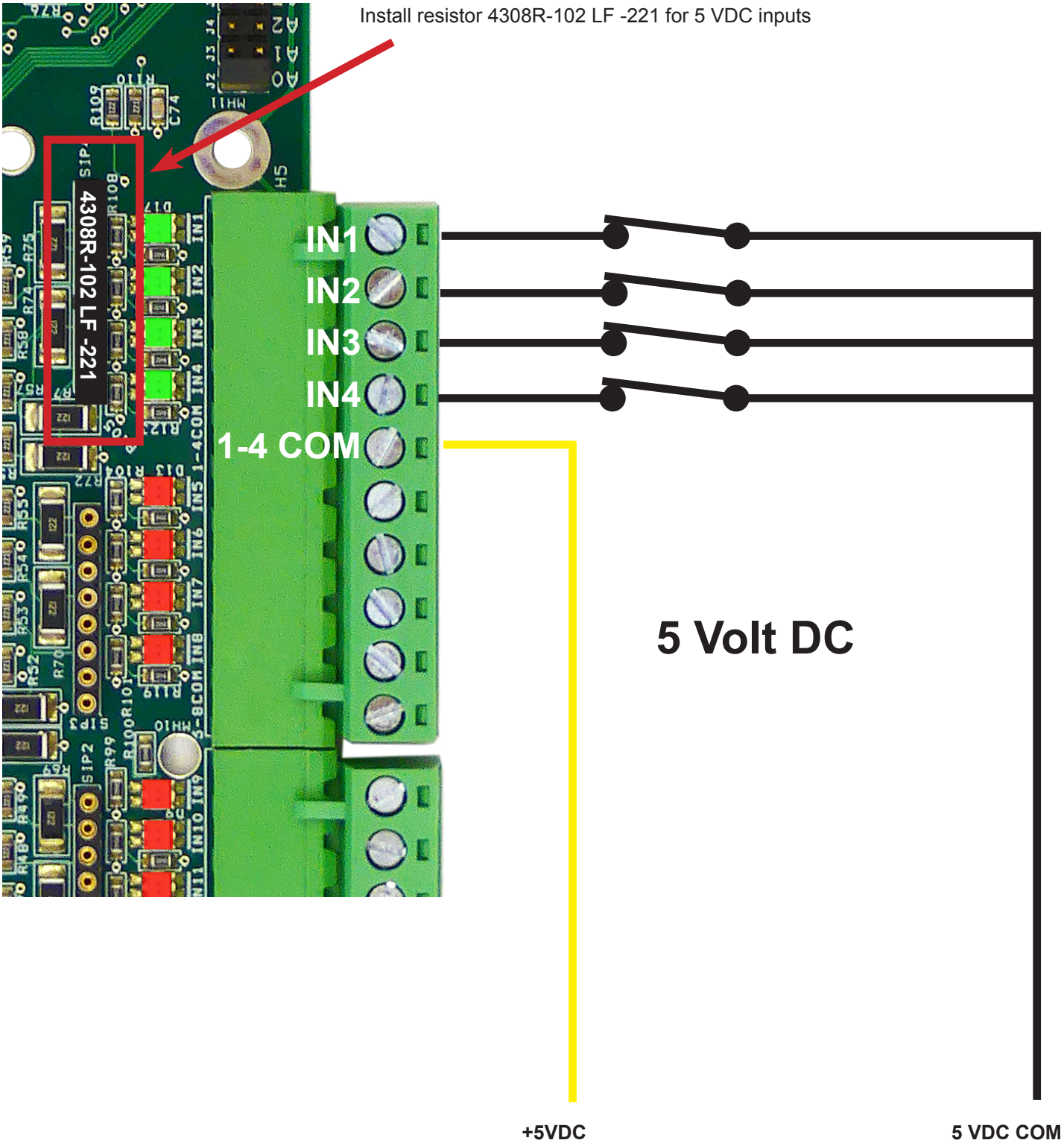

Ether1616 Input Wiring

Suggested 24 VDC NC limit switch “Sinking” wiring example

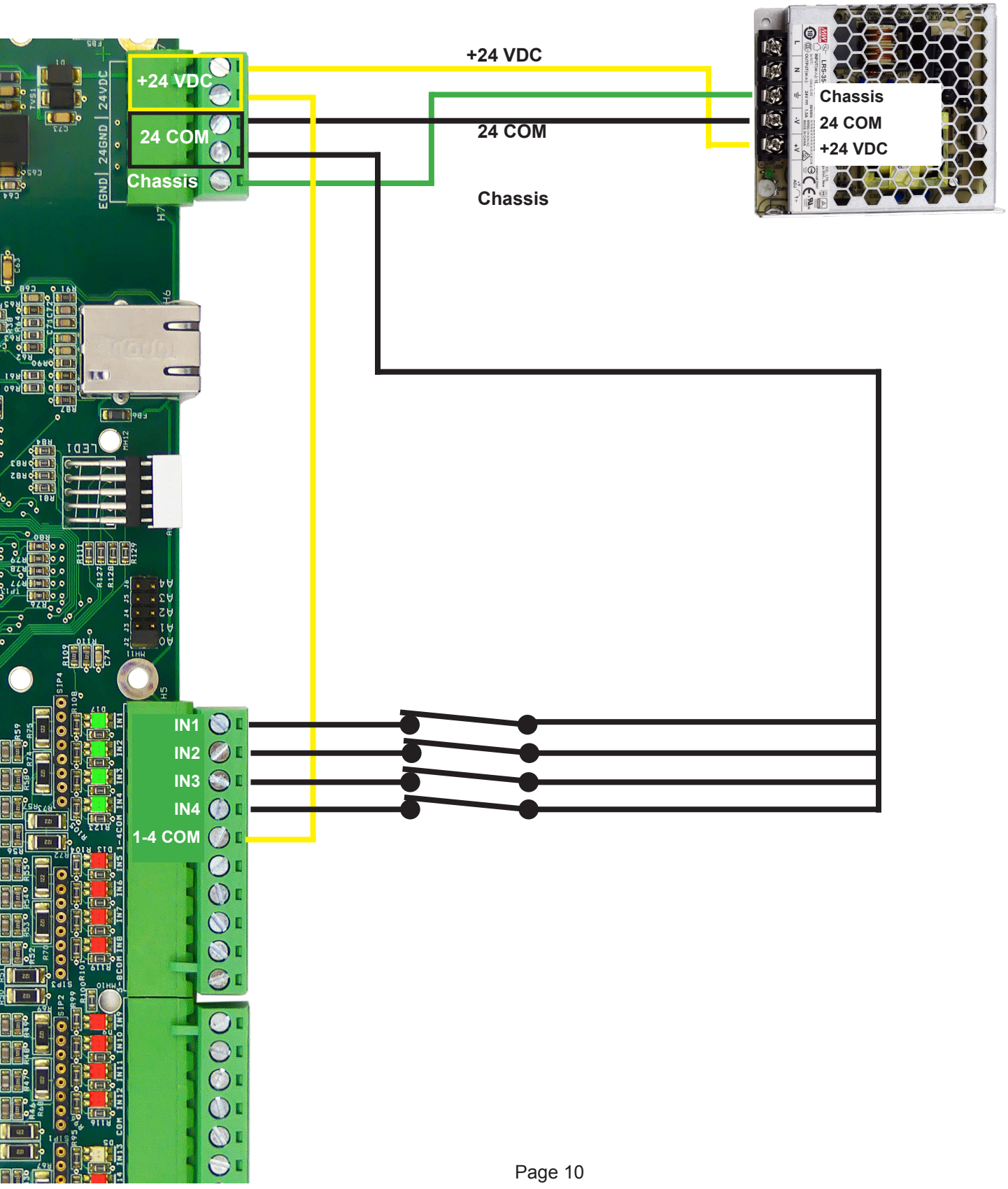

Ether1616 Input Wiring

Suggested 24 VDC NC Limit switch and NPN Prox Switch “Sinking” wiring example

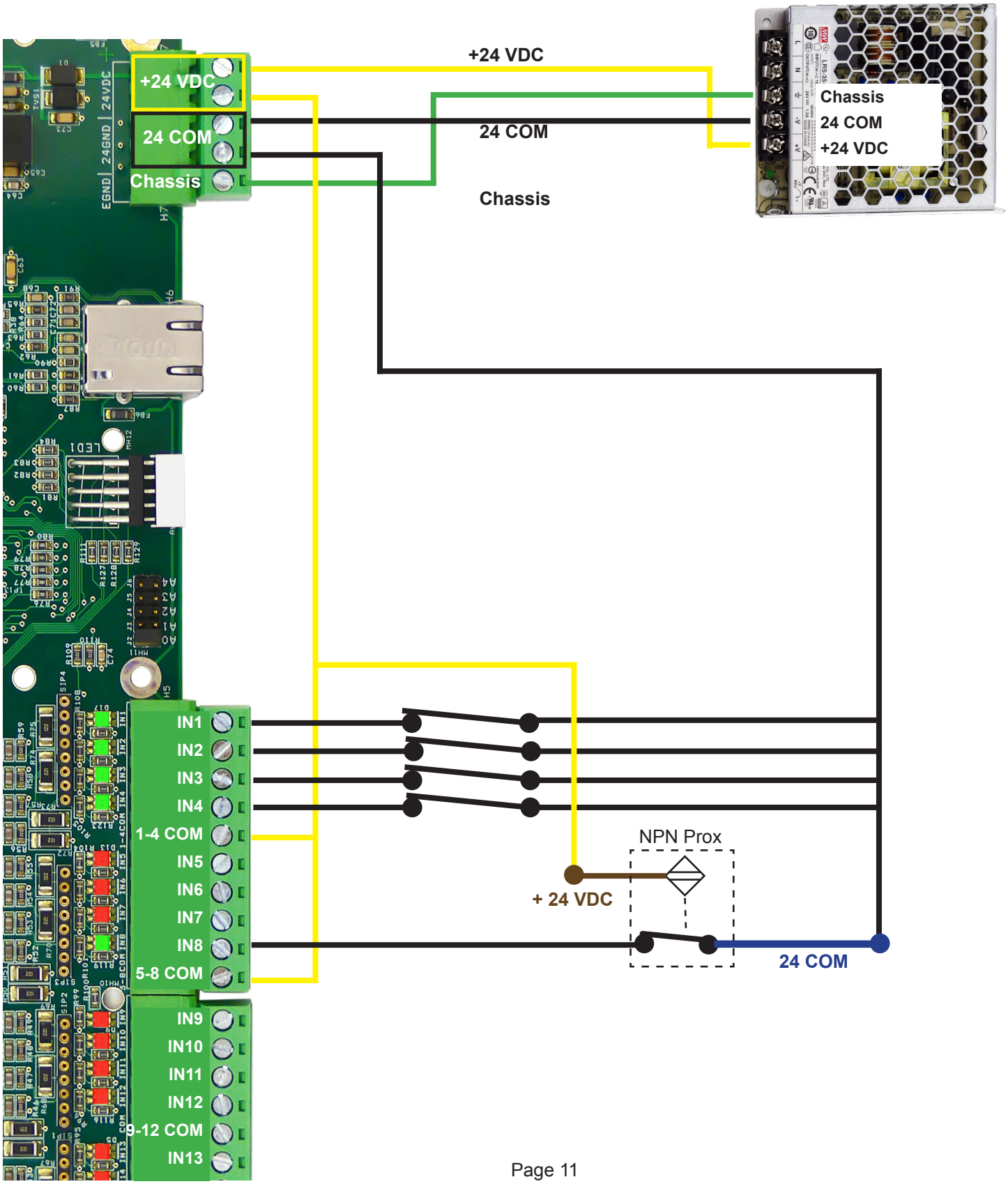

Ether1616 Input Wiring

24 VDC NC Limit switch and NO PNP Prox Switch “Sourcing” wiring example

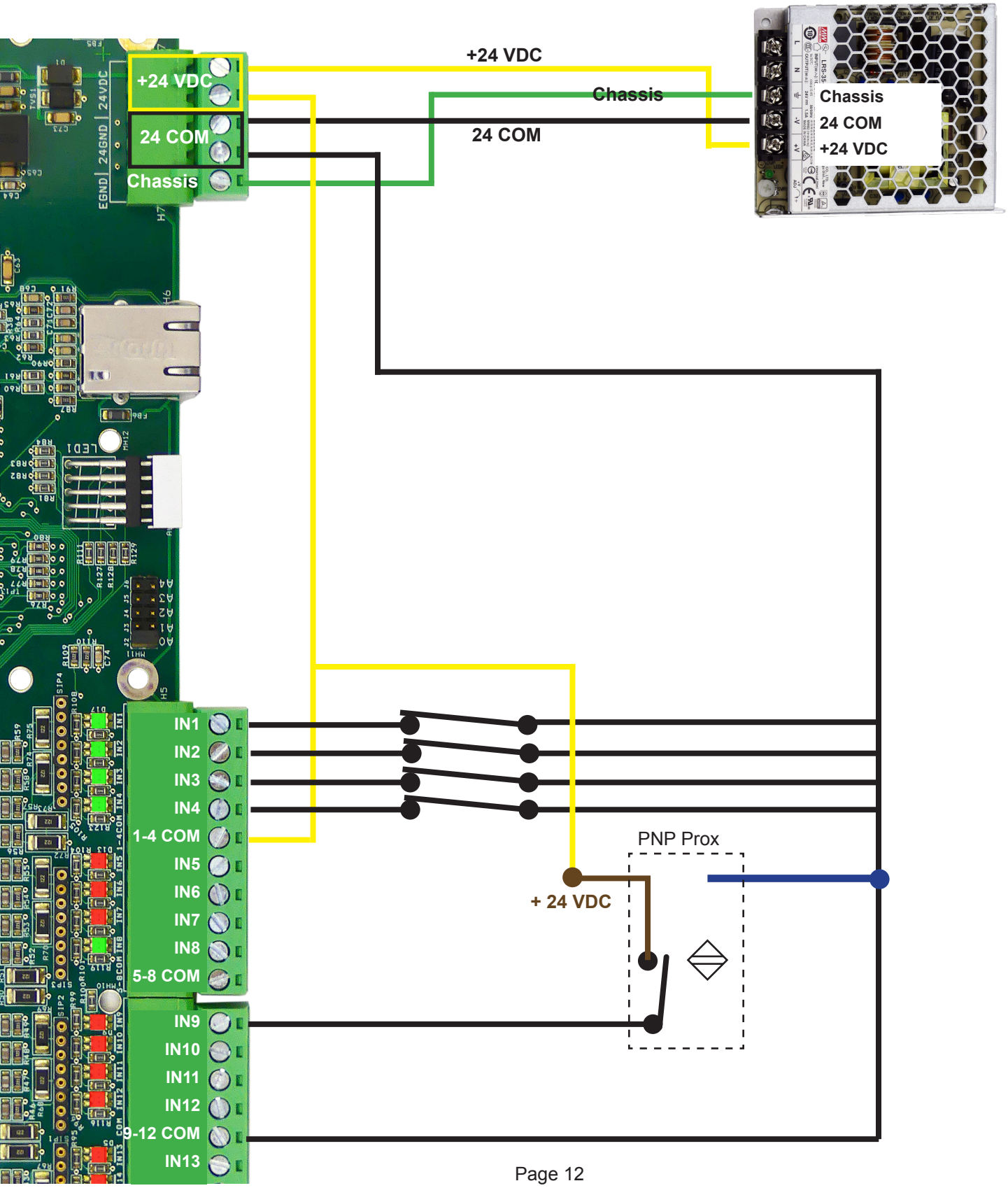

Ether1616 and Acorn Inputs

Any input where the highest response rate is desired should be connected directly to the Acorn inputs. In general, these types of inputs include:

- ATC Tool Counter Sensors
- ZRi encoder marker pulse homing inputs
- Touch probe inputs (Probes and Tool touch off sensors)
- Estop

All other inputs can be used on the Ether1616. The Ether1616 input response time on average is around 100 milliseconds, where as the Acorn input average response time is around 5 milliseconds. (See Appendix R for more detailed information on Ether1616 Input and Output Response Times).

Typical Ether1616 inputs

- Limit Switches of all types. (Mechanical or Proximatey) Plus and Minus for all Axes.
- Homing Switches of all types.
- Prox Switches for any use other than ATC tool counter
- Touch probe and Tool touch off Detection (senses if the probe is plugged in)
- ATC sensors such as Carousel in/out, Tool in/out, Tail stock in/out, Air Pressure Ok, Orient Complete
- External Operator control inputs such as Feed Hold, Cycle Start, Tool Check, Jog Stick controls
- Drive Fault signals for each individual drive, (FirstAxisDriveFault, SecondAxisDriveFault, etc)
- Spindle Drive Fault, Spindle Zero Speed, Spindle Thermal Alarm, Low Air pressure, Up to Speed, Spindle range
- Lube Ok, Draw bar Active
- Door Safety Interlock switches and indicators

Ether1616 Input numbers and CNC12 Input numbers

Input 1 on Ether1616 with A0 address = CNC12 input 33
Input 2 on Ether1616 with A0 address = CNC12 input 34
Input 3 on Ether1616 with A0 address = CNC12 input 35
etc..

Ether1616 A0 Input #	1	2	3	4	5	6	7	8	9	10	11	12	13	14	15	16
CNC12 Input # (Alt i)	33	34	35	36	37	38	39	40	41	42	43	44	45	46	47	48

Ether1616 Outputs

Sixteen Relay outputs are available. The Ether1616 sixteen outputs are used in conjunction with the external “8 Relay” modules. The Ether1616 connects to the 8 Relay module via the supplied keyed ribbon cables.

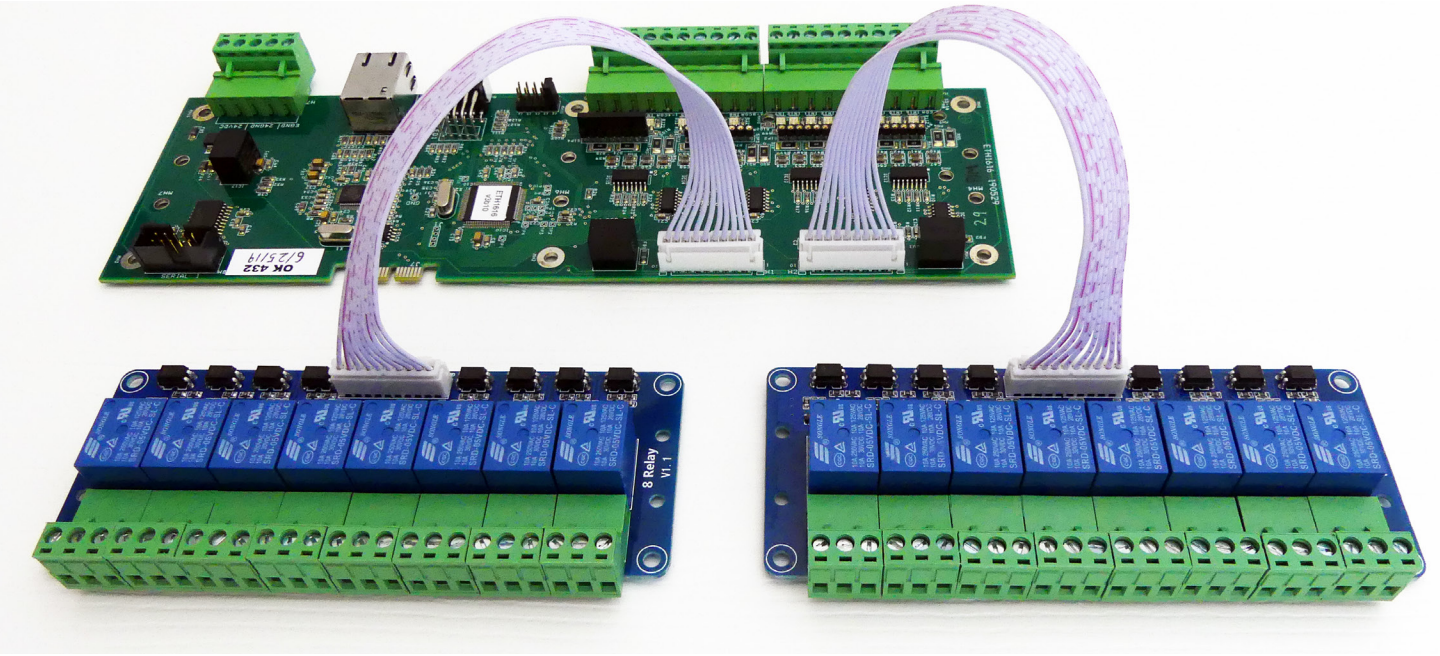

Keyed Output Ribbon cable only goes on one way.

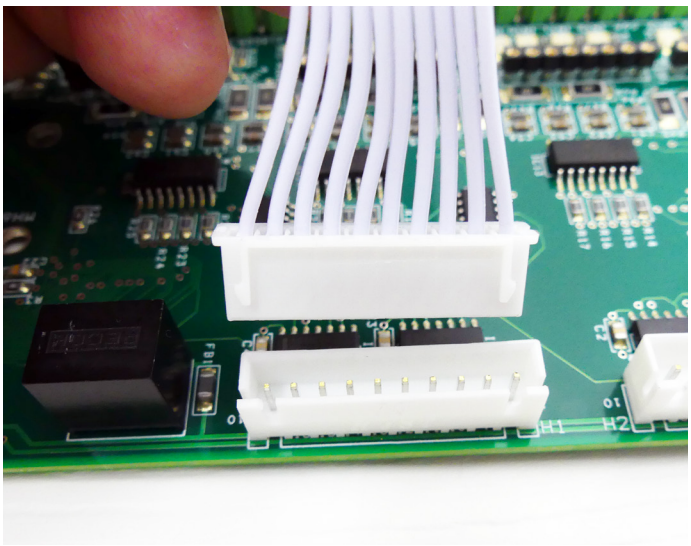

Output Ribbon Cable connection to Ether1616

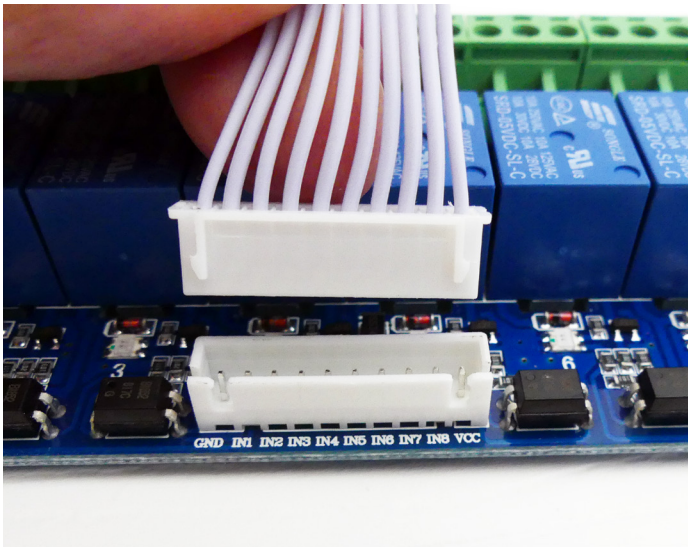

Output Ribbon Cable connection to 8 Relay Module

Ether1616 Outputs

The “8 Relay” modules are equipped with dual color LED indicator lights for each relay. Each numbered LED indicates whether its corresponding relay is energized by the Ether1616 or not. Red = Relay is not energized, Green = Relay is energized.

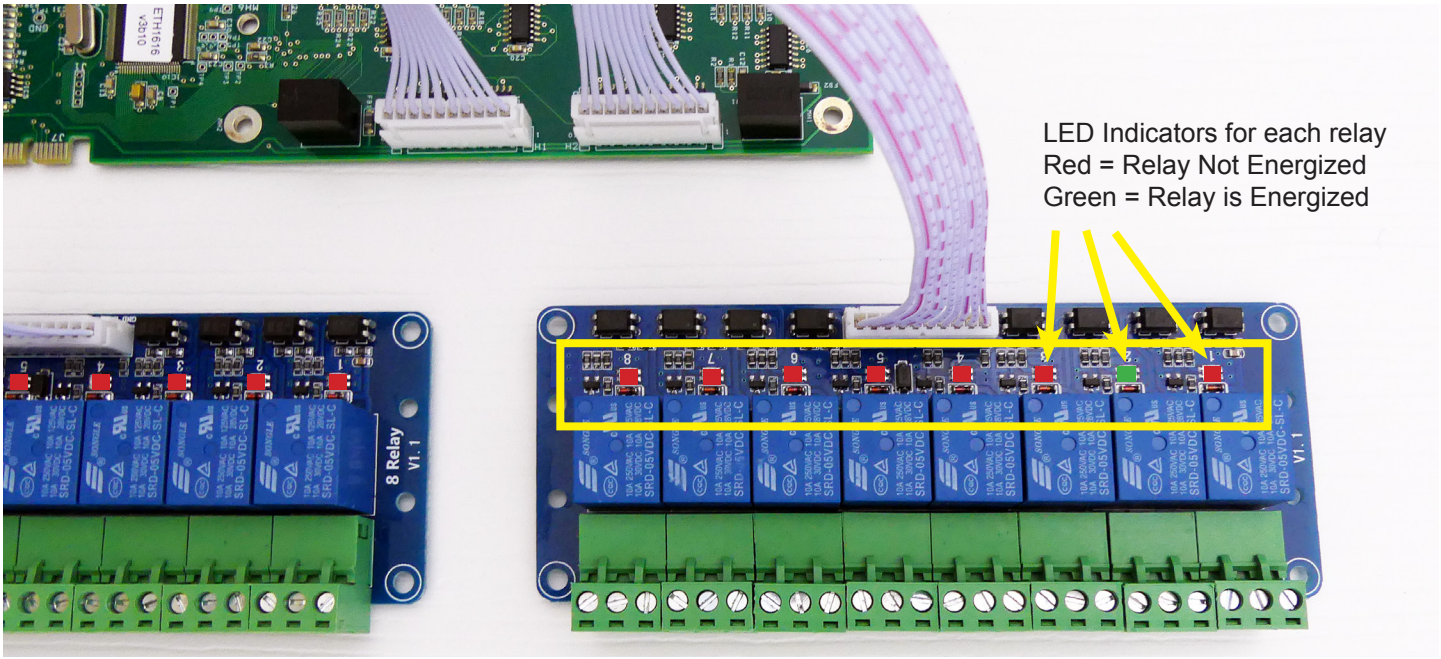

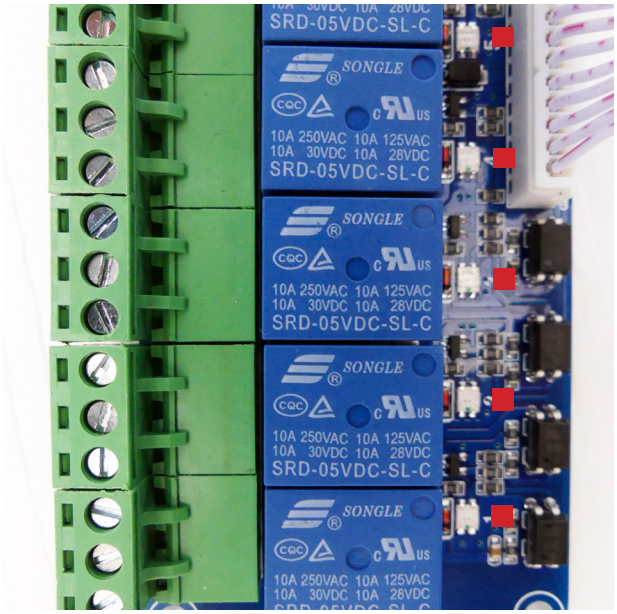

[Please see the relay data sheet here]for detailed information on the specifications of the relays used on the 8 Relay Module.

In general each Relay is MAX rated at:
10 amps at 250 VAC
10 amps at 125 VAC
10 amps at 30-28 VDC

This means that the relay can switch any voltage at any amperage in that range BUT, be aware for inductive loads the relays have a lower amp rating. For example: Inductive load ratings are only 3 amps at 120 vac and 28 VDC! see the spec sheet link above for details.

If larger currents or voltages need switching then it is simple to control a larger relay (or use a VFD to control the motor instead of a larger relay) with any of the relays on the 8 Relay Module to meet the application requirements. Examples of this are on pages 20, 21, 22, and 23.

Ether1616 Outputs

The relays on the 8 Relay Module are single pole double throw (SPDT) relays. Relays are just a switch. SPDT relays are a switch with two connections one on either side of the switch so, when the relay is ON two of the terminals are connected and when the relay is OFF the other two of the terminals are connected. Said another way, the common terminal connects to one of the two sides of the switch but never connecting to both at the same time. Each relay has three connection terminals as seen in the photo below: a Common, a Normally Open and a Normally Closed connection. Normally Open means that when the relay is NOT energized there is no connection to common. Normally Closed means that when the relay is NOT energized there is a connection to common.
The screw terminals connectors on the 8 relay board are removable.

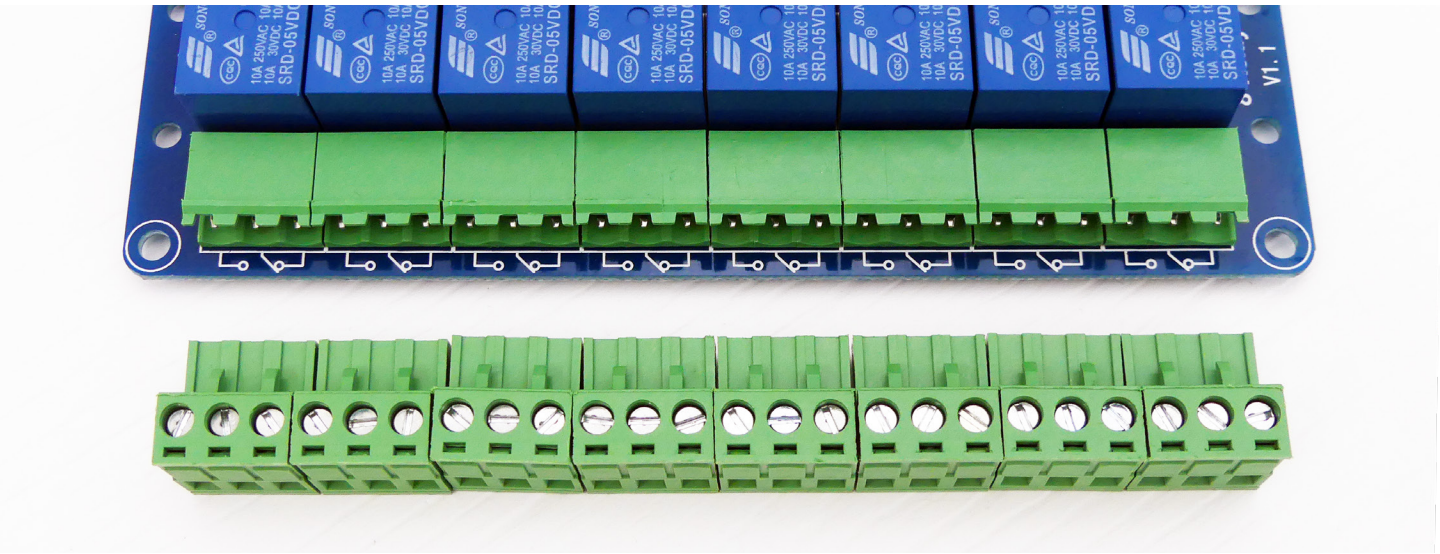

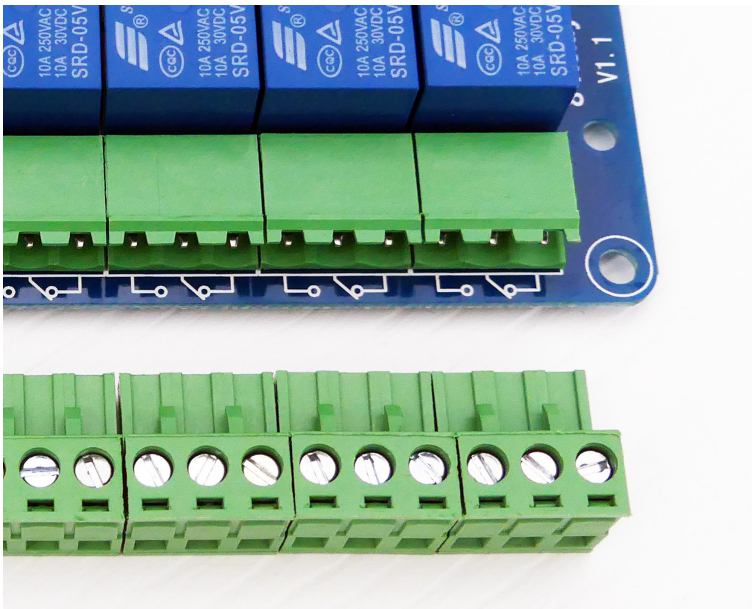

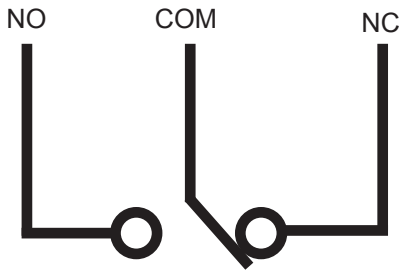

Ether1616 Outputs

Wiring example to turn on a Light Bulb when the Output is activated.
When an Output is activated the corresponding relay is energized and the light turns on.

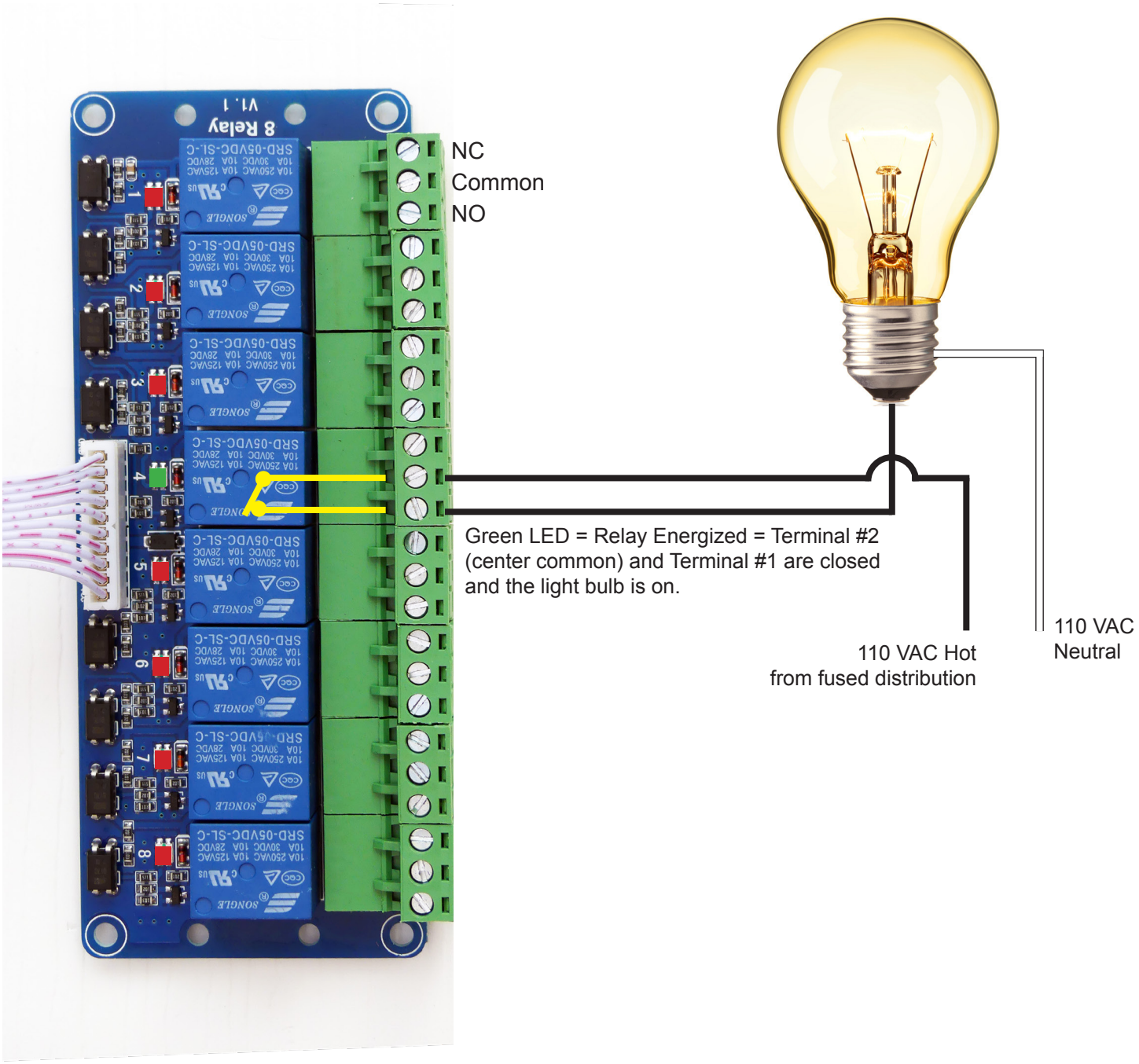

Ether1616 Output Examples

Wiring example of a small DC electric motor rated under 5 amps..
When an Output is activated the corresponding relay is energized and the motor rotates.

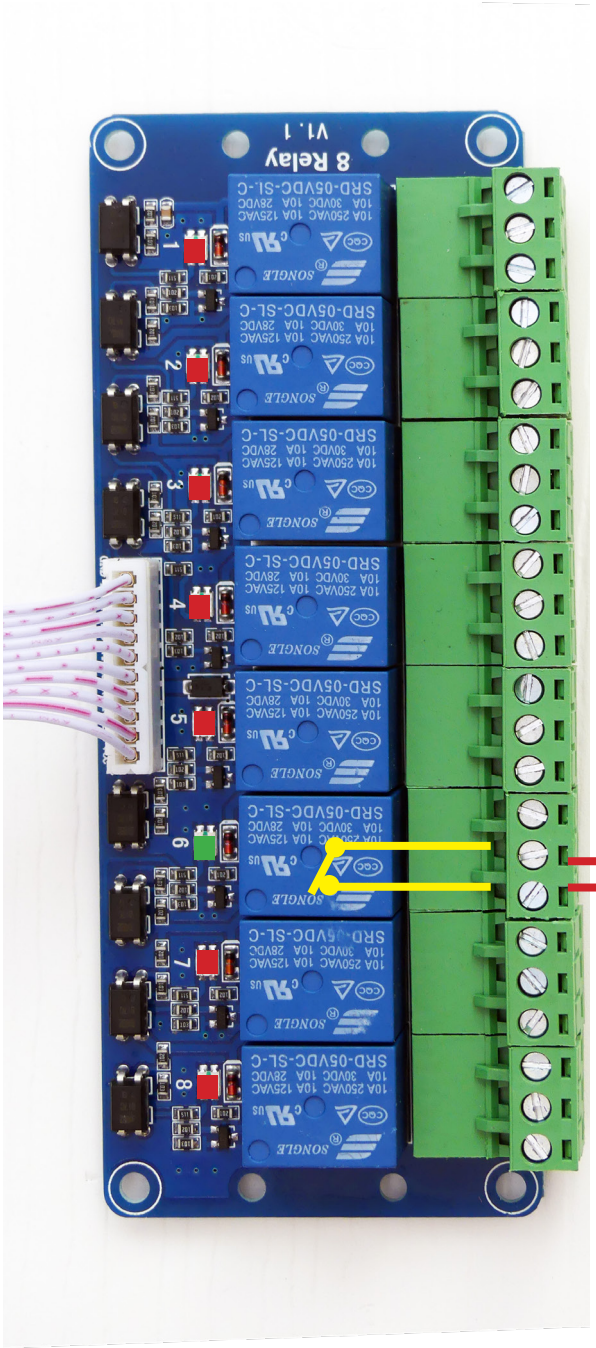

Small DC motor (**less than 5 amps for NO terminals, less than 3 amps for NC terminals)**

Diode Snubber

Diodes Incorporated
1N4006-T

Chassis

Green LED = Relay Energized = Terminal #2 (center common) and Terminal #1 are closed and the motor is running.

DC power from fused terminal distribution

DC power from Terminal distribu-tion

Ether1616 Outputs

Wiring example of a small single phase electric motor rated under 5 amps.
When an Output is activated the corresponding relay is energized and the motor rotates.

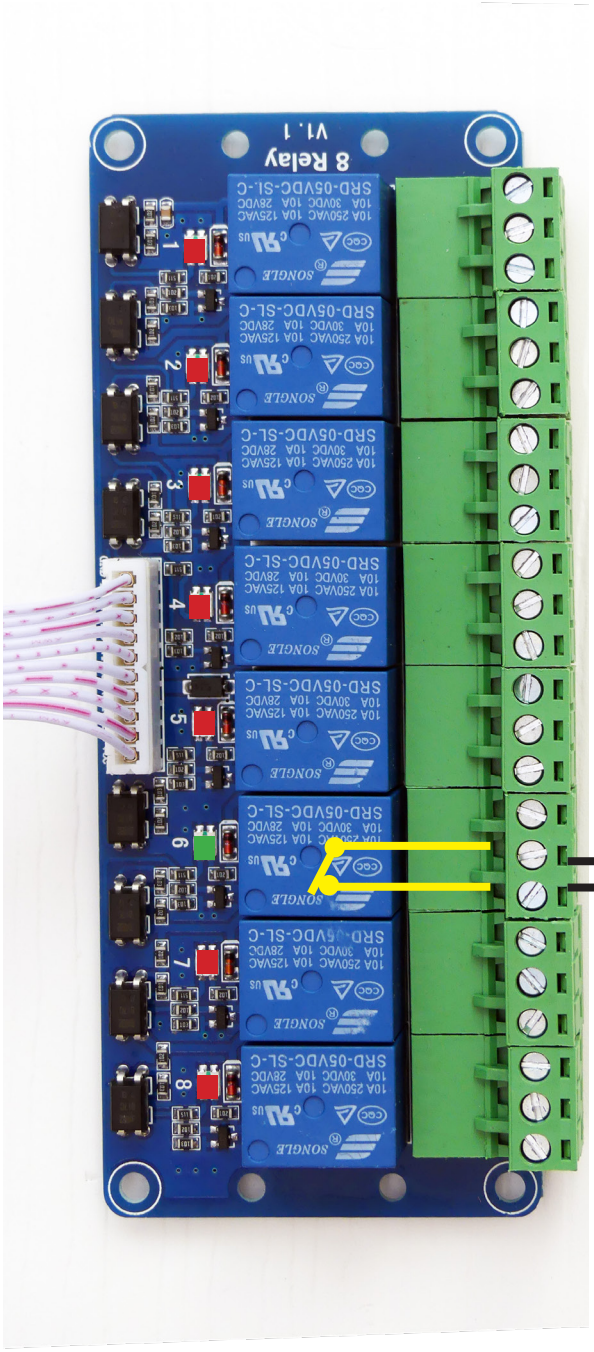

110/220 VAC 1 phase Motor (**less than 5 amps for NO terminals, less than 3 amps for NC terminals)**

Quenarc/Snubber

1ph Quencharc
Centroid #1819

Ground

Green LED = Relay Energized = Terminal #2 (center common) and Terminal #1 are closed and the motor is running.

110220 VAC Hot from fused terminal distribution

110 VAC Neutral From Terminal distribution

Ether1616 Outputs

Example of wiring for a motor rated at greater than 5 amps.
When an Output is activated the corresponding relay is energized and the motor rotates.

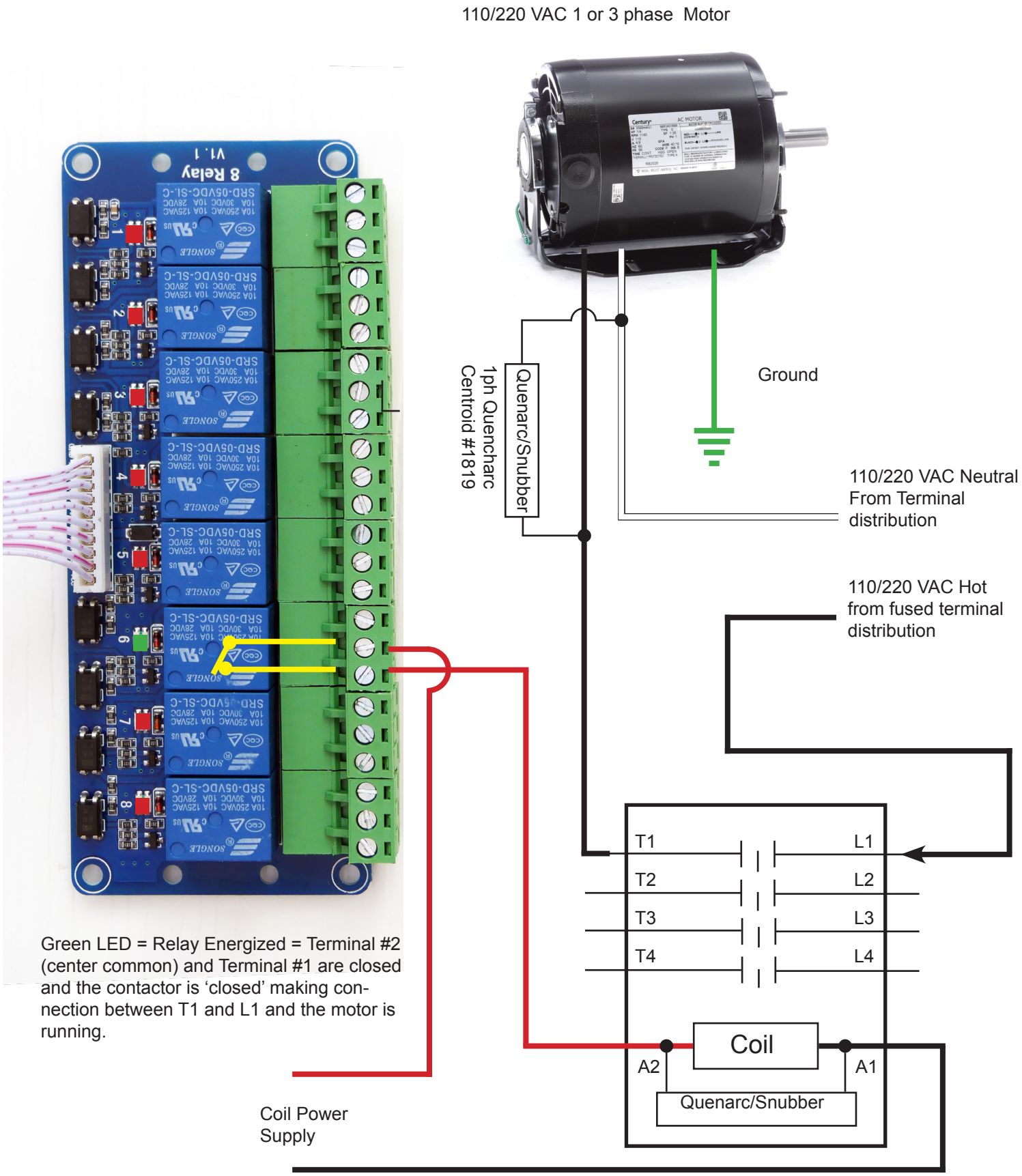

Green LED = Relay Energized = Terminal #2 (center common) and Terminal #1 are closed and the contactor is 'closed' making connection between T1 and L1 and the motor is running.

Ether1616 Outputs

Wiring example to turn on a 3 phase motor with 3 phase power using a contactor.
When an Output is activated the corresponding relay is energized and the motor rotates.

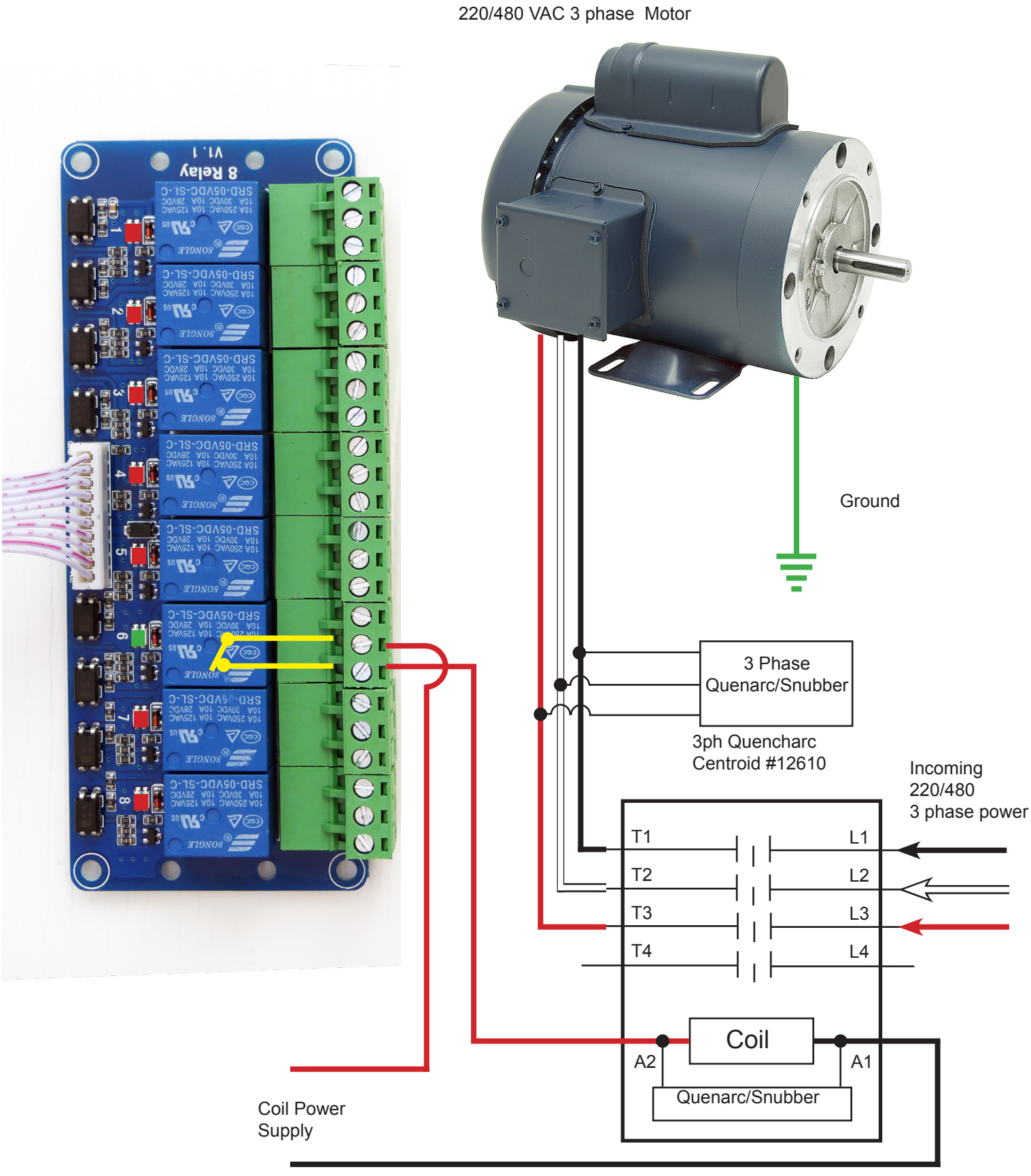

Ether1616 Outputs

Wiring example to run a unidirectional 3 phase motor with 1 phase power using a VFD

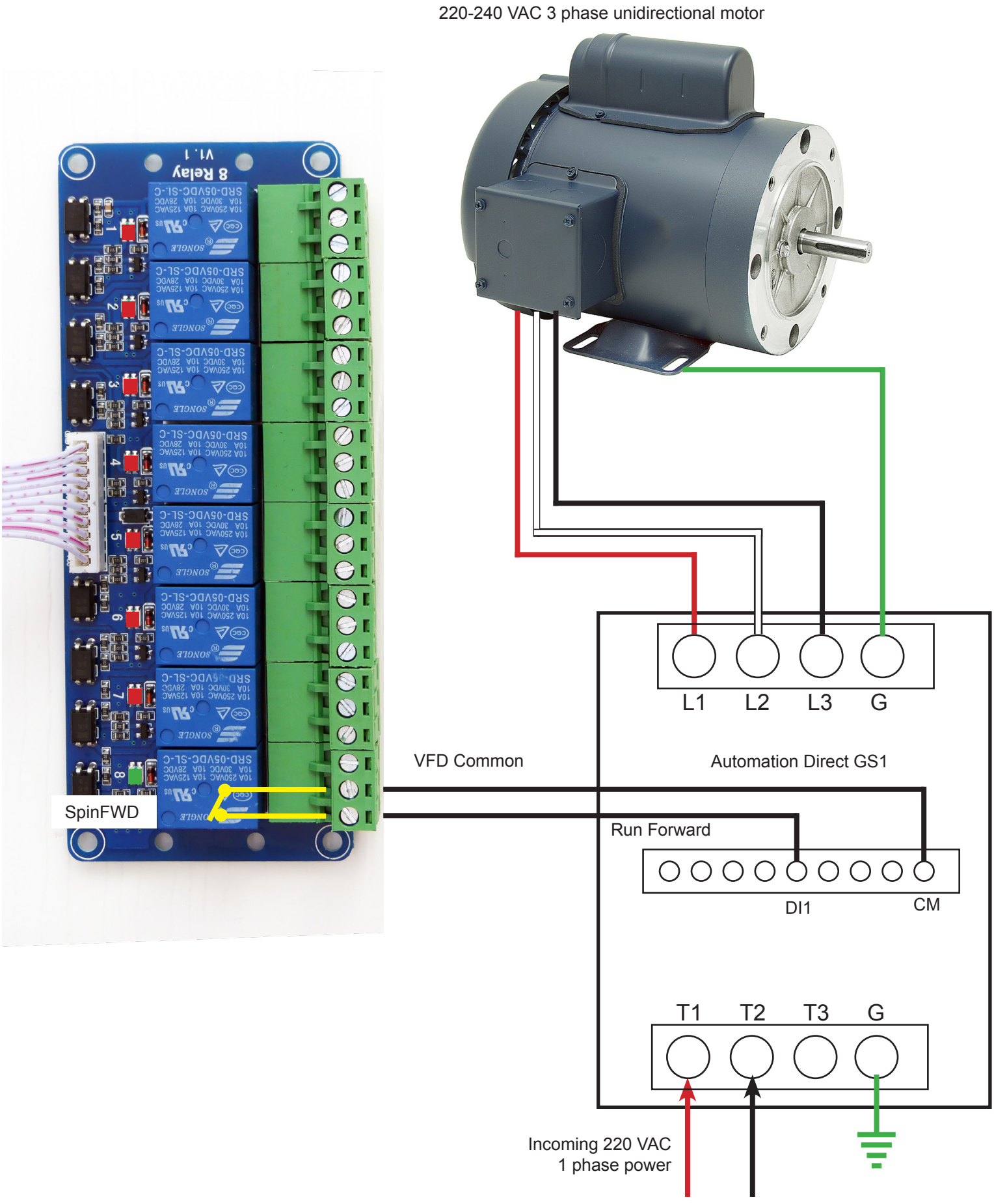

Ether1616 Outputs

Wiring example to run a Bi-directional 3 phase motor with 1 phase power using a VFD

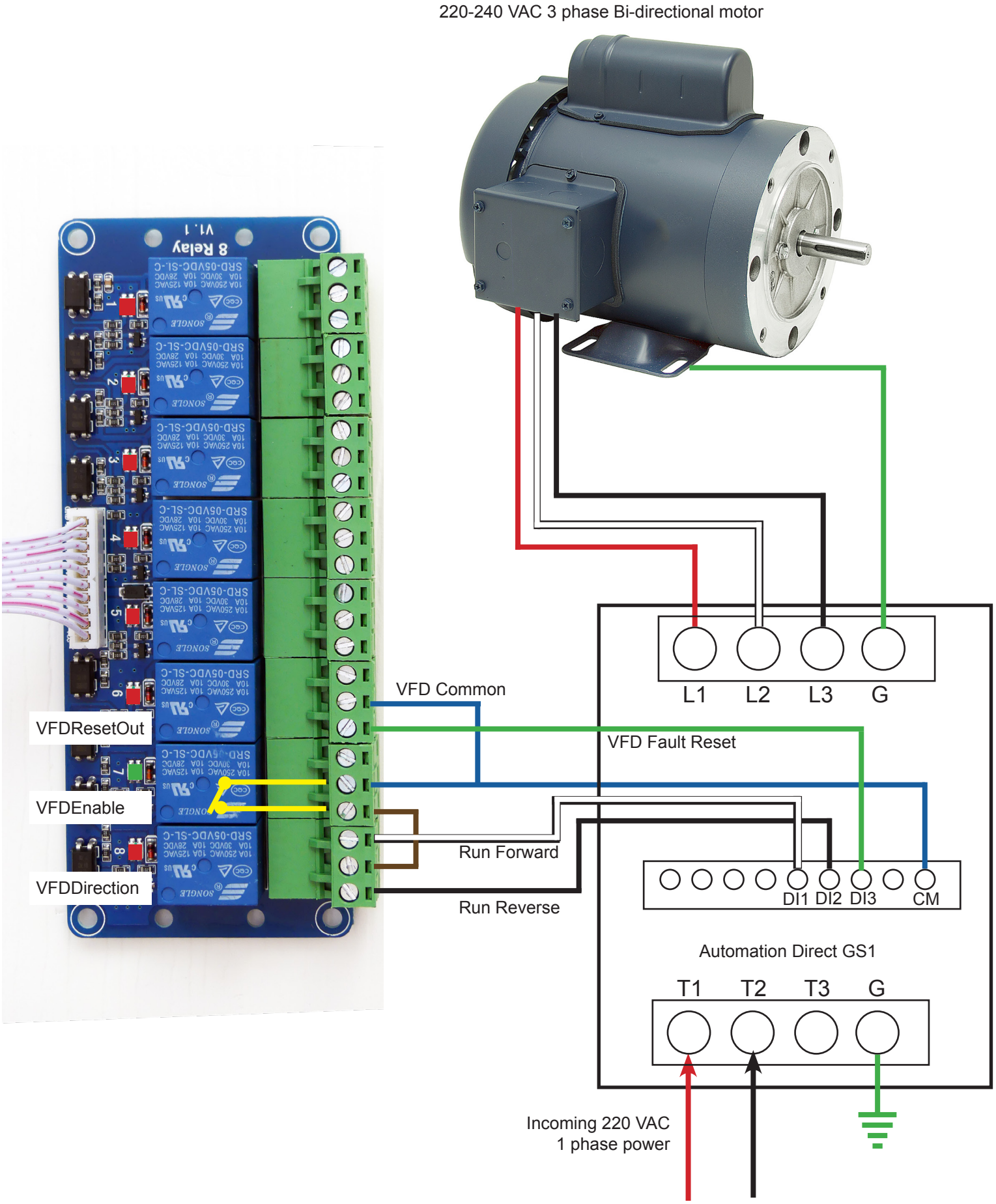

Ether1616 Acorn Outputs

Any Output where the highest response rate is desired should be connected directly to the Acorn Output. In general, these types of Outputs include:

- Estop (NoFaultOut)
- ATC Turret/Carousel Motor controls
- Spindle Motor VFD direction (SpinFWD, SpinRev, or VFDDirection)

All other Outputs can be used on the Ether1616. The Ether1616 output response time on average is around 100 milli-seconds, where as the Acorn input average response time is around 5 milliseconds. (See Appendix R for more detailed information on Ether1616 Input and Output Response Times).

Typical Ether1616 outputs

- Mist, Flood, Lube Pump motor
- Air Blow, Dust Collection, DustFootActive
- VacuumOn, PopUpPins,
- UnclampTool
- TurnClampOn
- CutOff, PartChute
- SpindleCooling fan/pump
- Orient Spindle
- LaserAlignActivate
- and many other custom output uses

Ether1616 Input numbers and CNC12 Input numbers

Output 1 on Ether1616 with A0 address = CNC12 output 33
Output 2 on Ether1616 with A0 address = CNC12 output 34
Output 3 on Ether1616 with A0 address = CNC12 output 35
etc..

Ether1616 A0 Output #	1	2	3	4	5	6	7	8	9	10	11	12	13	14	15	16
CNC12 Output # (Alt i)	33	34	35	36	37	38	39	40	41	42	43	44	45	46	47	48

Ether1616 Input and Output setup with the Acorn CNC configuration Wizard

The Acorn Wizard will automatically detect and recognize any Ether1616 boards connected to the system Ethernet switch. Each Ether1616 configuration list will appear to the right of the Acorn Integrated Input and Output tables in both the Wizard Input Definitions menu and Output Definitions menu under “Primary System”.

To assign an input function to an Ether1616 input number simply choose an input function from the lists by clicking and dragging the input function name from the list to the desired location on the Ether1616 input assignment table.

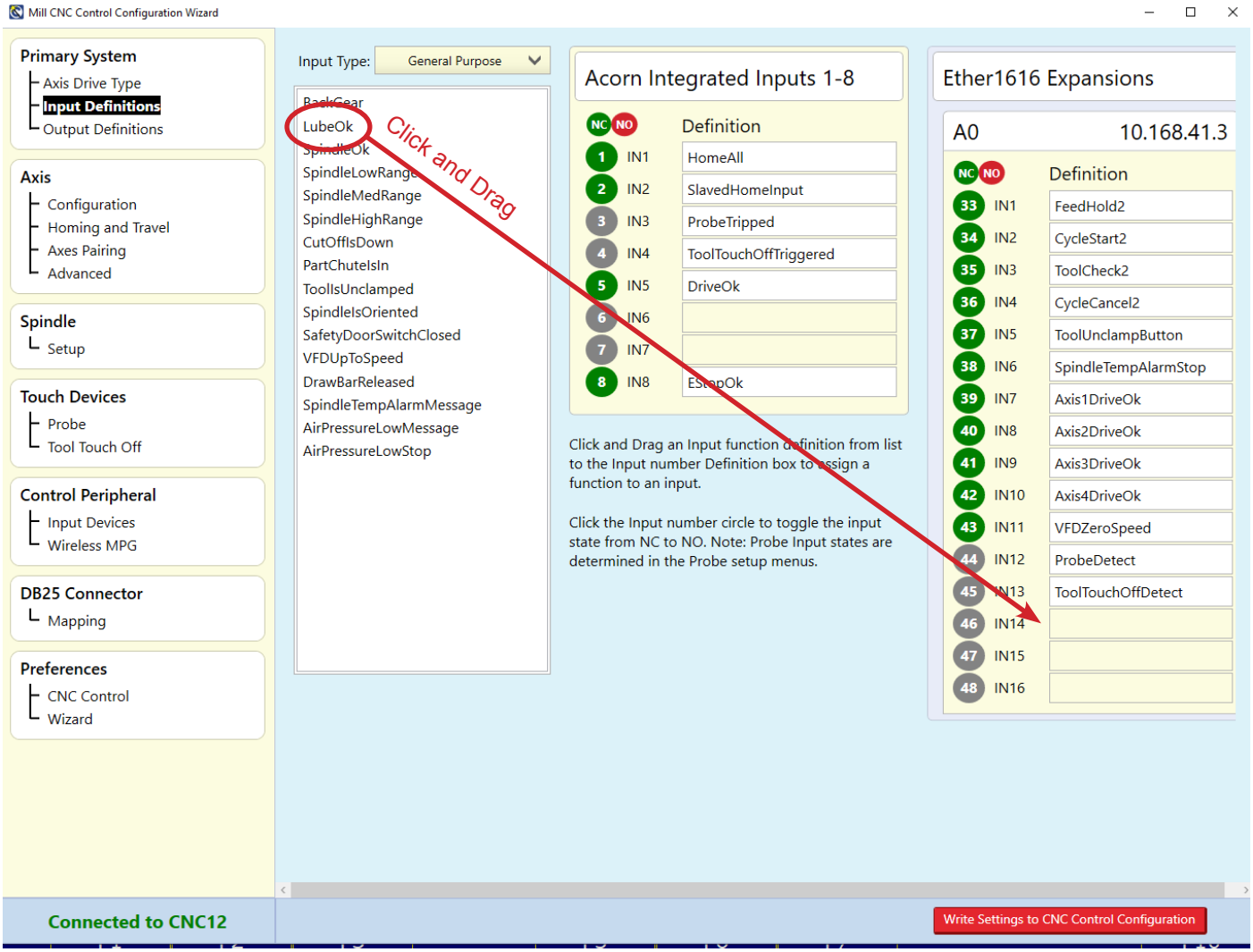

To remove any input functions from the Ether1616 input assignment table simply click on and drag the input function name away from and out of the Ether1616 input assignment table and let go and the input function will snap back to the input function list.

When using the Wizard to configure Inputs and Outputs for the first time or adding new ones or changing them, the Wizard will instruct you to shut down and power cycle the Acorn board when you press “Write Settings to CNC Control Configuration” for the changes (and new PLC program that the Wizard creates) to take affect.

Hint: During the Ether1616 and Acorn Wizard input and output setup process when instructed to power cycle the Acorn be sure to power cycle the Ether1616 and the Acorn at the same time. And be sure to leave the power ON to the Ethernet Switch all the time when configuring CNC12 with the Wizard for best results and quickest reboots. Once the Acorn and Ether1616 have been configured as desired the Ethernet switch can be shut down as normal at the same time as the rest of the CNC control components.

To assign an Output function to an Ether1616 Output number simply choose an output function from the list by clicking and dragging the output function name from the list to the desired location on the Ether1616 output assignment table.

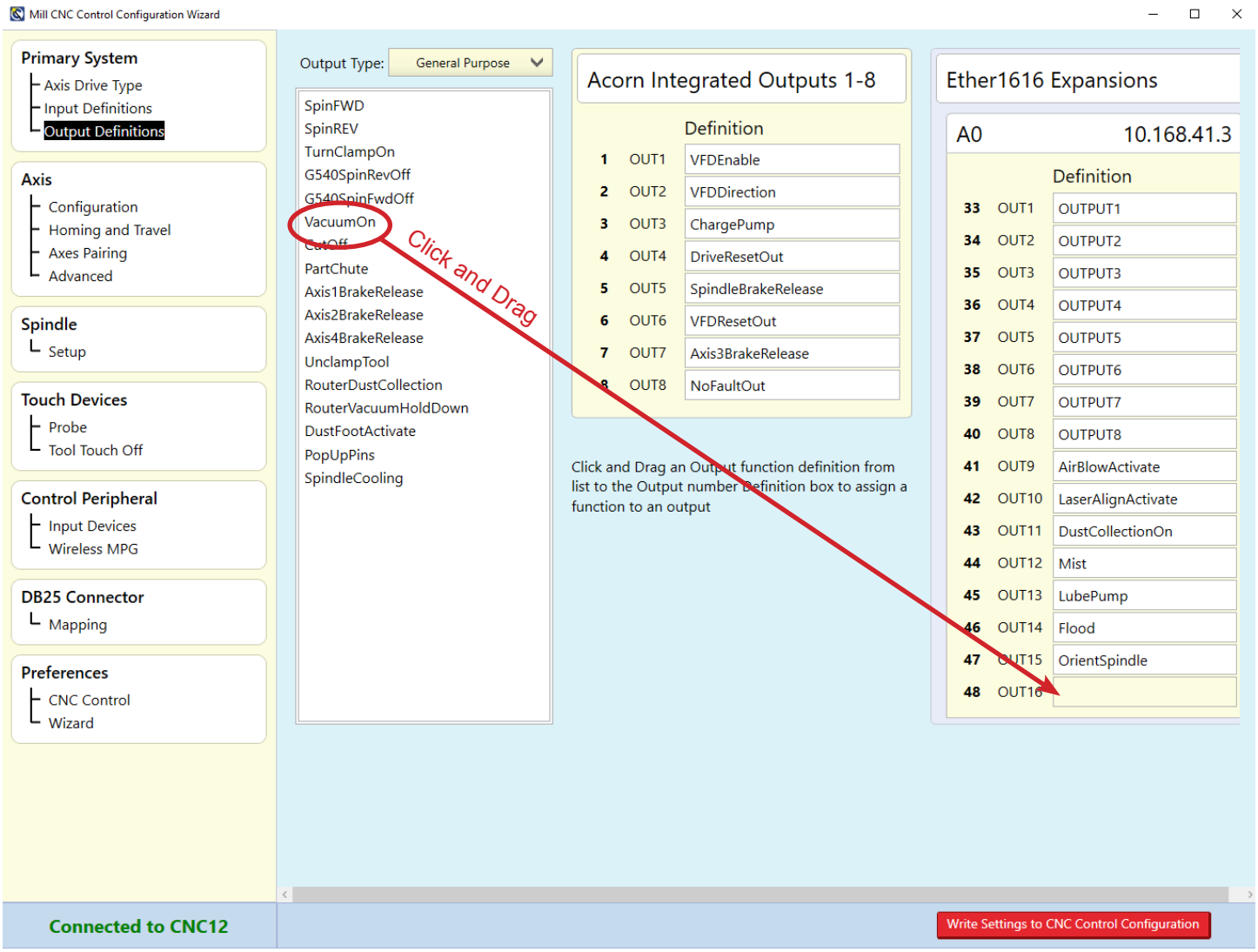

If the Ether1616 is not auto detected by the Wizard and CNC12, the Wizard input and output menus will display “Auto Detection did not find any Ether1616 expansion boards connected to the system Ethernet Switch”

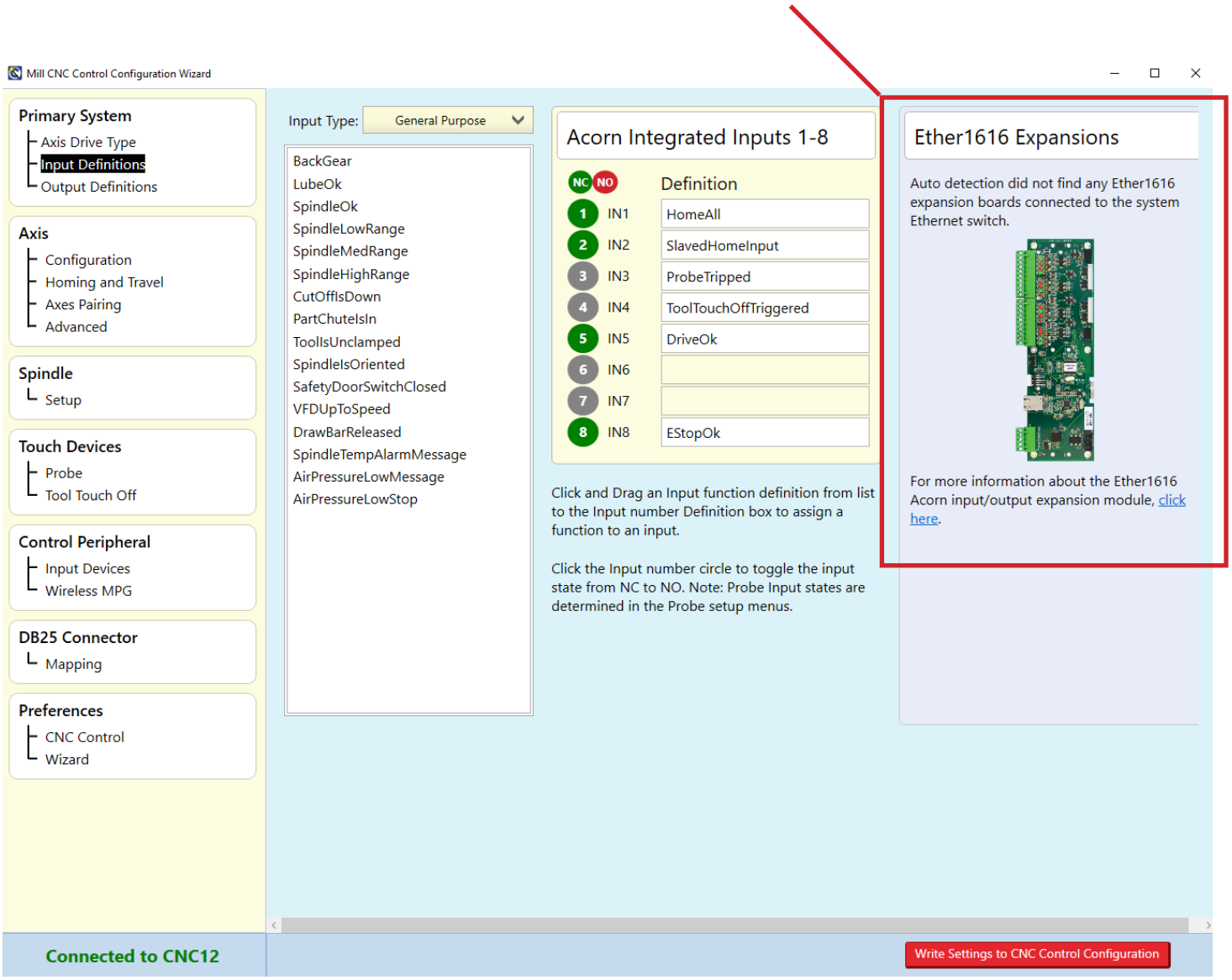

In this case verify that the Ether1616 has power and is connected to the Ethernet switch.

Acorn Wizard Standard Inputs

Input Wizard Name	Description / Purpose	Notes
CycleStart2	Input for 2nd external button, (same action as button on VCP with same name, user can use either button)	
FeedHold2	input for 2nd external button, (same action as button on VCP with same name, user can use either button)	
CycleCancel2	input for 2nd external button, (same action as button on VCP with same name, user can use either button)	
ToolCheck2	input for 2nd external button, (same action as button on VCP with same name, user can use either button)	
FirstAxisDriveOk	Individual Drive Fault input for each axis. FirstAxisDriveOk, SecondAxisDriveOk, etc.. add corresponding drive fault message "X axis drive Fault", "Y axis drive Fault" etc..	Individual DriveOk Signals, On (Green) = Good, Off (Red) = Fault
ToolUnclampButton	Input for External button that when pressed activates the “ToolUnclamp” output. When input is made, ToolUnclamp output is energized.	Input for external Tool Unclamp Button , these are typically mounted on the spindle for manual tool changes. Press the button and the tool is released from the spindle. This button is deactivated when running a job.
VFDZeroSpeed	Input from VFD to confirm that spindle has stopped. Used in G code and Tool change macros.	M100 or M101/5000X where X in the input number. PLC can be modified to issue message if desired.
VFDUpToSpeed	Input from VFD to confirm that spindle has reached the specified speed. Used in G code and Tool Change macros	
SpindleTempAlarmMessage	Input for Temperature Alarm, issue message when input is Active, finishes current G code job (does not stop current Job that is running).	works just like low lube….issues warning message, continues to run until job is complete
SpindleTempAlarmStop	Input for Temperature Alarm, Issues Estop condition when input is active.	Issues a message Estop condition when input is active.
AirPressureLowMessage	Input for Low Air Alarm, issue message when input is Active, finishes current G code job (does not stop current Job that is running).	works just like low lube….issues warning message, continues to run until job is complete
AirPressureLowStop	Input for Temperature Alarm, Issues Estop condition when input is active.	Issues a Message and Estop condition when input is active.
DrawBarReleased	An input that is typically used on ATC router spindles. Input is active when Draw Bar/Pull Stud is active indicating that the tool is released from the spindle.	Displays message that “Draw Bar is Released” when input is active, then follow up message when input is inactive. “Draw Bar Clamped”. Is treated same way as ToolisUnclamped logic wise. ToolisUnclamped and DrawbarReleased are not selectable at same time.

Acorn Wizard Standard Inputs

Input Wizard Name	Description / Purpose	Notes
DoorSafetySwtichClosed	Input used for machine tool safety, typically a door switch but could also be used for other safety device input	P985 =1 allows slow jog with door open, P85=2 Does not allow any movement with door open.
HomeAll	A single input for all Home switches for automatic homing of all axes. The recommended homing method for Acorn.	Cncm.hom, cnct.hom, Related VCP buttons: Reset Home, cycle start
LimitAll	An optional single input for all limit switches for over-travel protection above and beyond software travel limits.	Related VCP buttons: Limit Override
FirstAxisHomeOk	Used as an alternative to HomeAll. Home switches for each axis are wired into a dedicated input.	Uses up inputs unnecessarily, Use HomeAll instead. Only used in special cases where the Home Switches can not be wired in series or parallel.
SecondAxisHomeOk		
ThirdAxisHomeOk		
FourthAxisHomeOk		
FirstAxisHomeLimitOk	Special Case: Used when it is desired to have one switch perform both the homing and limit functions. (The recommended method is to use HomeAll and then Optional LimitAll see schematic S14954)	Uses up inputs unnecessarily, Use HomeAll, LimitAll, and Software Travel Limits instead. Only used in special cases where the Limit Switches can not be wired in series or parallel. Or it is desired to have individual inputs for each switch. Used in conjunction with OPTIONAL FirstAxisMinus(or Plus) LimitOK for the over-travel limit switch. opposite.
SecondAxisHomeLimitOk		
ThirdAxisHomeLimitOk		
FourthAxisHomeLimitOk		
FirstAxisMinusLimitOK	Special Case: Used for an individual limit Switch.	Uses up inputs unnecessarily, Use LimitAll instead. Only used in special cases where the Limit Switches can not be wired in series or parallel. Or it is desired to have individual inputs for each switch. Use Software Travel Limits instead.
FirstAxisPlusLimitOK		
SecondAxisMinusLimitOK		
SecondAxisPlusLimitOK		
ThirdAxisMinusLimitOK		
ThirdAxisPlusLimitOK		
FourthAxisMinusLimitOK		
FourthAxisPlusLimitOK		

Acorn Wizard Standard Inputs

Input Wizard Name	Description / Purpose	Notes
DriveOK	An input coming from the Servo Drive to let Acorn know that there are no faults from the Drives	
BackGear	An input from a switch. that indicates the position of the “back gear” on a milling machine head.	
LubeOK	An input from a Lube pump low lube indicator	
SpindleOk	An input coming from the Spindle VFD to let Acorn know that there are no faults from the VFD.	
SpindleLowRange	An input from a switch. or the VCP button with same name that indicates the position of the spindle gear Range.	M41 select Low Range
SpindleMedRange		M42 select Med Range
SpindleHighRange		M43 select High Range
ChuckIsOpen	An input from a switch. that indicates the position of the chuck	
ChuckIsClosed	An input from a switch. that indicates the position of the chuck	
SpindlesOriented	An input from a VFD orient card which indicates that the spindle is oriented. Typically used for ATC’s	

Acorn Wizard Standard Outputs

Output Wizard Name	Description / Purpose	Notes
UnclampTool	Output that activates to release a tool from an ATC spindle. Typically used to control a Air solenoid. Typically output is Active for release. Not active for tool clamped.	M15/M16
TailStockInOut	Output that is typically used to activate air solenoid to move a Lathe TailStock In or Out.	M32, M33 M32 Turns on TailstockInOut, will stay on unless m33 is issued, even through resets and Faults
VfdEnable	Output used to enable a VFD. Lets VFD know that it is good to go. see schematic #S15009 for wiring example.	M3/M4/M5 Used in conjunction with VfdDirection.
VfdResetOut	Output used to reset a VFD after a fault. see schematic #S15009 for wiring example.	Output is Active (Green) with Physical Estop depressed (Estop condition from the actual Estop button input). Output is inactive (RED) when Estop is released.
VfdDirection	Output to activate when motor direction is commanded to reverse. For support of SPDT VFD to Relay connections just like Allin1DC and Oak. See chuck for more info. see schematic #S15009 for wiring example.	M3/M4/M5 VCP spindle CW/CCW buttons.
DustFootActivate	Output to control (on/off) dust foot	Requires Macro, M94/28. (Note: Example use contained in M57 & M58)
LaserAlignActivate	Output to control (on/off) cross hair material alignment laser marking	Requires Macro, M94/29. (Note: Example use contained in M57 & M58)
AirBlowActivate	Output to control (on/off) air blow solenoid	M15, Activates with UnclampTool
RouterDustCollection	Output to control (on/off) Dust Collection motor thru relay or contactor	M8, Works exactly like Flood, uses M8/M9 and uses same button on the VCP as Flood. Cant assign Flood and Dustcollection at same time.
RouterVacuumHoldDown	Output to control (on/off) material Vacuum hold down typically air solenoid	M7, Works exactly like Mist, uses M7/M9 and uses same button on the VCP as Flood. Cant assign Mist and Dustcollection at same time.
PopUpPins	Output to control (on/off) material alignment pins typically air solenoid.	Requires Macro, M94 (Note: Example use in M55 & M56)
SpindleCooling	Output to control (on/off) spindle cooling, typically a fan or water pump	Requires Macro, M94 (Note: Example use in M55 & M56)
ServoEnable	Gary is asking for an output to act just like the enable signal. So turn on this output when any axis enable is active. Turn off this output with any estop condition.	
SpinFWD	Used to command a VFD or relay	M3, M5
SpinREV	Used to command a VFD or relay	M4, M5
NoFaultOut	Output that is primarily used to control an Estop contactor	Output is active when there are No Faults with the CNC System. Output is inactive during an estop condition. (an Estop condition can be triggered by many things)

Acorn Wizard Standard Outputs

Output Wizard Name	Description / Purpose	Notes
DriveResetOut	Output that is primarily used to reset a servo or stepper drive after a drive fault condition.	Output is Active (Green) with Physical Estop depressed (Estop condition from the actual Estop button input). Output is inactive (RED) when Estop is released. Requires a physical estop button to work, the Reset button on the VCP is not an Estop.
LubePump	Output used to turn on and off a lube pump.	See Centroid Operator manual chapter 15 for info on Parameter #179 to change the way this output functions to match the type of lube pump being used.
SpindleBrakeRelease	Output used to energize a brake release, energizes when spindle is commanded to spin	Parameter #990 sets the delay timer in milliseconds. Default is 250 milliseconds (a quarter of a second)
Flood	Used to control a VFD or relay for a flood pump	M8 Flood ON, M9 Flood Off
TurnClampOn	Output to control (on/off) material hold down clamps, typically an air solenoid or a Spindle Clamp	M10 Clamp ON,M11 Clamp Off Can Also be used for a Spindle Clamp on/off or any other general clamp use.
G540SpinRevOff	Used with GeckoDrive G540 in Legacy mode, not recommend. Use G540 in “Drive Only” mode. See schematic # 14979 for recommend G540 hookup	
G540SpinFwdOff		
Mist	Used to control a solenoid or relay for a mister	M7 Mist ON, M9 Mist Off
MillVacuumOn	An output typically used for Vacuum Hold down ON/OFF	M33 activates output to start Vacuum. M34 turns vacuum off.
MillDustCollectionOn	An output typically used for Dust Collector control.	M35 activates output to start Dust Collector. M36 turns Dust Collector Off.
OpenChuck	Used to control a solenoid or relay to open a chuck on a Lathe	M10, Parameter 992 is timer (ms) for Turnoff or Fault if ChuckIsOpen Input is selected. M10 Turns on OpenChuck, Turns off when timer or Input is seen. M10 Turns off M11
CloseChuck	Used to control a solenoid or relay to close a chuck on a Lathe.	M11, Parameter 992 is timer (ms) for Turnoff or Fault if ChuckIsClose Input is selected. M11 Turns on CloseChuck, Turns off when timer or Input is seen, M11 Turns off M10
Output1	General Purpose output, can only be assigned to Output number with same number.	M61 activates Output1 M81 deactivates Output1
Output2		M62 activates Output2 M82 deactivates Output2
Output3		M63 activates Output3 M83 deactivates Output3
Output4		M64 activates Output4 M84 deactivates Output4
Output5		M65 activates Output5 M85 deactivates Output5

Acorn Wizard Standard Outputs

Output Wizard Name	Description / Purpose	Notes
Output6	General Purpose output, can only be assigned to Output number with same number.	M66 activates Output6 M86 deactivates Output6
Output7		M67 activates Output7 M87 deactivates Output7
Output8		M68 activates Output8 M88 deactivates Output8
CutOff	Used to control a solenoid or relay to activate a Cutoff tool on a Lathe	Parameter 995 is timer (ms) for Turnoff or Fault if Cutoffisdown Input is selected, M13 Turns on Cutoff, Waits for input or timer, turns off Cutoff,
PartChute	Used to control a solenoid or relay to activate a part chute on a Lathe	Parameter 994 is timer (ms) for Turnoff or Fault if PartChuteIsIn Input is selected, M22 Turns on Partchute, Waits for input or timer, turns off Partchute, M23 is optional turnoff
Axis1BrakeRelease	Individual Output used to control an individual Axis Brake. Brakes are typically an electromechanical brake. Activates with Estop condition, deactivates with axis motor movement. Can be used with external brakes or 'brake motors'	When Axis is Powered, Brake is Released (Green). Estop/Fault applies brake (Red), M93 Releases power brakes ON (Red)
Axis2BrakeRelease		
Axis3BrakeRelease		
Axis4BrakeRelease		
UnclampTool	Output used to release the tool drawbar to unclamp the tool.	M15 unclamps tool M16 reclamps tool Also Activated by ToolUnclampButton Input
OrientSpindle	Used to send output signal to orient card to go ahead and orient the spindle	M19 turn on spindle orient output and wait for "SpindlesOriented" input to activate. , M20 turn off spindle orient output.

Acorn CNC12 Standard Macros

“Macro” Name	Notes:
M3	Spindle CW
M4	Spindle CCW
M5	Spindle OFF
M6	Tool Change, if no custom mfuncm6.mac exists in cncm/t then the CNC12 default M6 is used.
M7	Mist
M8	Flood
M9	Mist and Flood OFF
M10	; Mill: SET ClampOn ; Lathe: SET ChuckOpen, RST ChuckClose
M11	; Mill: RST ClampOn ; Lathe: RST ChuckOpen, SET ChuckClose
M13	Cutoff Tool ON
M14	Cutoff Tool OFF
M15	Tool unclamp macro
M16	Tool clamp macro
M19	Spindle Orientation Macro
M20	Turn Spindle Orientation Off Macro
M22	PartchuteIn macro
M23	Turn off PartchuteIn macro
M27	VacuumOn macro
M28	Turn off VacuumOn macro
M32	Turn on TailStockInOut
M33	Turn off TailStockin, Turn on TailStockOut
M34	Unused Macro and Available for customization
M35	DustCollection On
M36	Turn off DustCollection

Acorn CNC12 Standard Macros

“Macro” Name	Notes:
M37	Unused Macro and Available for customization
M38	Turn off Custom macro 37
M41	Selects Low Range Spindle
M42	Selects Med Range Spindle
M43	Selects High Range Spindle
M48	Aux 1 macro
M49	Aux 2 macro. Sets specified axis to 0 part 0, VCP Aux 2 Button
M50	Aux 3 macro. Sets all axes to part 0, VCP Aux 3 Button
M51	Unused macro and Available for customization
M52	Unused macro and Available for customization
M53	Unused macro and Available for customization
M54	Unused macro and Available for customization
M55 (mfunc55.mac)	User Customizable Macro, pre mapped to VCP Aux 8
M56	User Customizable Macro, pre mapped to VCP Aux 9
M57	User Customizable Macro, pre mapped to VCP Aux 10
M58	User Customizable Macro, pre mapped to VCP Aux 11
M59	Reset Home Position, pre mapped to VCP Aux 12 “Reset Home”
M61	Use Acorn Wizard i/o map to set Acorn Output 1 = to “OUTPUT1” then this macro (M61) will turn on that output
M62	Use Acorn Wizard i/o map to set Acorn Output 2 = to "OUTPUT2" then this macro (M62) will turn on that output
M63	Use Acorn Wizard i/o map to set Acorn Output 3 = to "OUTPUT3" then this macro (M63) will turn on that output
M64	Use Acorn Wizard i/o map to set Acorn Output 4 = to "OUTPUT4" then this macro (M64) will turn on that output
M65	Use Acorn Wizard i/o map to set Acorn Output 5 = to "OUTPUT5" then this macro (M65) will turn on that output
M66	Use Acorn Wizard i/o map to set Acorn Output 6 = to "OUTPUT6" then this macro (M66) will turn on that output
M67	Use Acorn Wizard i/o map to set Acorn Output 7 = to "OUTPUT7" then this macro (M67) will turn on that output
M68	Use Acorn Wizard i/o map to set Acorn Output 8 = to "OUTPUT8" then this macro (M68) will turn on that output

Acorn CNC12 Standard Macros

"Macro" Name	Notes:	
M69	Move all axes to machine Zero	
M70	Sets an axis to zero	
M71	Axes Home Tripped Check (Used in Paired Axes Auto Squaring)	
M72	3rd Axis Homing (Used in Paired Axes Auto Squaring)	
M73	Independent Axis Homing (Used in Paired Axes Auto Squaring)	
M74	Paired Axes Auto Home/Squaring (Used in Paired Axes Auto Squaring)	
M75	Pair Axes (Used in Paired Axes Auto Squaring)	
M81	Use Acorn Wizard i/o map to set Acorn Output 1 = to "OUTPUT1" then this macro (M61) will turn OFF that output	
M82	Use Acorn Wizard i/o map to set Acorn Output 2 = to "OUTPUT2" then this macro (M62) will turn OFF that output	
M83	Use Acorn Wizard i/o map to set Acorn Output 3 = to "OUTPUT3" then this macro (M63) will turn OFF that output	
M84	Use Acorn Wizard i/o map to set Acorn Output 4 = to "OUTPUT4" then this macro (M64) will turn OFF that output	
M85	Use Acorn Wizard i/o map to set Acorn Output 5 = to "OUTPUT5" then this macro (M65) will turn OFF that output	
M86	Use Acorn Wizard i/o map to set Acorn Output 6 = to "OUTPUT6" then this macro (M66) will turn OFF that output	
M87	Use Acorn Wizard i/o map to set Acorn Output 7 = to "OUTPUT7" then this macro (M67) will turn OFF that output	
M88	Use Acorn Wizard i/o map to set Acorn Output 8 = to "OUTPUT8" then this macro (M68) will turn OFF that output	
Park.mac	User editable machine tool parking macro that is used when shutting down the machine for the day. Allows user to override the default park behavior with any customization necessary. With Acorn Typically park is used to return the machine tool to the home position when using "Simple Home" (M26) or very close to the home position so homing out the next morning is fast and easy. Editable from the Acorn Wizard or in the 'system' folder	
Plcmacro1.mac	Macros used in conjunction with the corresponding Macro 1, Macro 2, Macro 3, Macro 4 buttons on the Wireless MPG. Editable from the Acorn Wizard or from the 'system' folder.	Macro 1 button on the MPG
Plcmacro2.mac		Macro 2 button on the MPG
Plcmacro3.mac		Macro 3 button on the MPG
Plcmacro4.mac		Macro 4 button on the MPG

"RouterDustCollection (M8)" can not be used with "Flood (M8)" at the same time.
MillDustCollectionOn (M35) CAN be used with "Flood (M8)" at the same time.

"RouterVacuumHoldDown (M7)" can not be used with "Mist (M7)" at the same time.
MillVacuumOn (M33) CAN be used with "Mist (M7)" at the same time.

VfdDirection (M3/M4) can not be used in conjunction with SpinFWD (M3), SpinREV (M4), G540SpinRevOff, G540SpinFwdOff outputs, see schematics for proper hookups and use

CNC12 Ether1616 Warning Messages

1.) Ether1616 configuration change detected: “There are 1 devices (A0) detected and 0 configured” CNC12 has found a new Ether1616. This message occurs the very first time you connect a Ether1616 to the Ethernet switch and start CNC12. CNC12 is letting you know it has detected the Ether1616 but it has not been configured by the Wizard. Click “Yes” and go configure the Ether1616 using the Wizard.

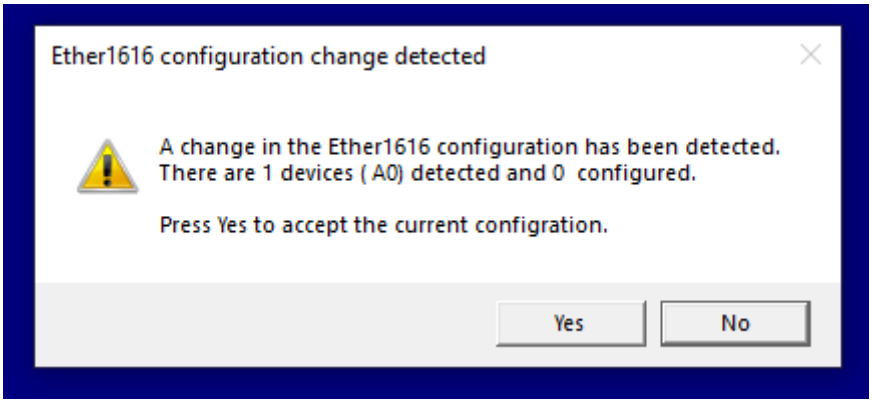

2.) “0 devices detected and 1 (A0) configured” This message occurs when a Ether1616 (A0) has previously been configured but CNC12 has not detected it during startup. Cause: Ether1616 (A0) is not powered or not connected to the Ethernet switch.

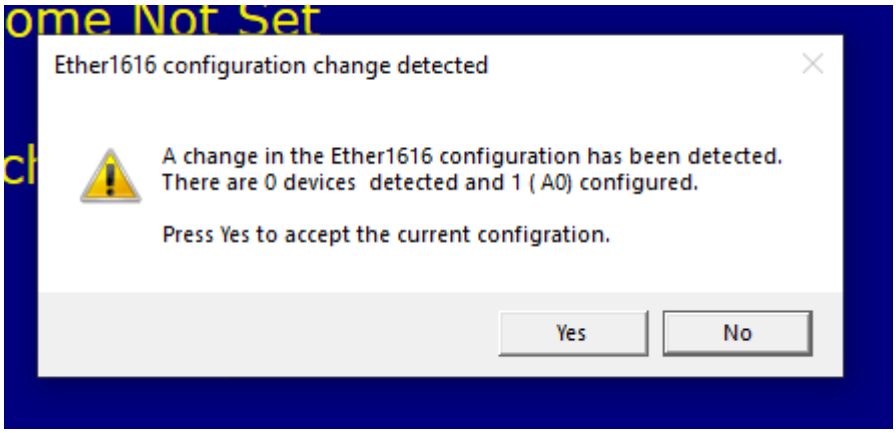

3.) “9055 ETHER1616 OFFLINE!!!” This message occurs when CNC12 detected a configured Ether1616 on start up but for some reason while CNC12 was running the Ether1616 went offline. Cause: Ether1616 power was removed or Ehter1616 has been unplugged from the Ethernet switch with CNC12 was running.

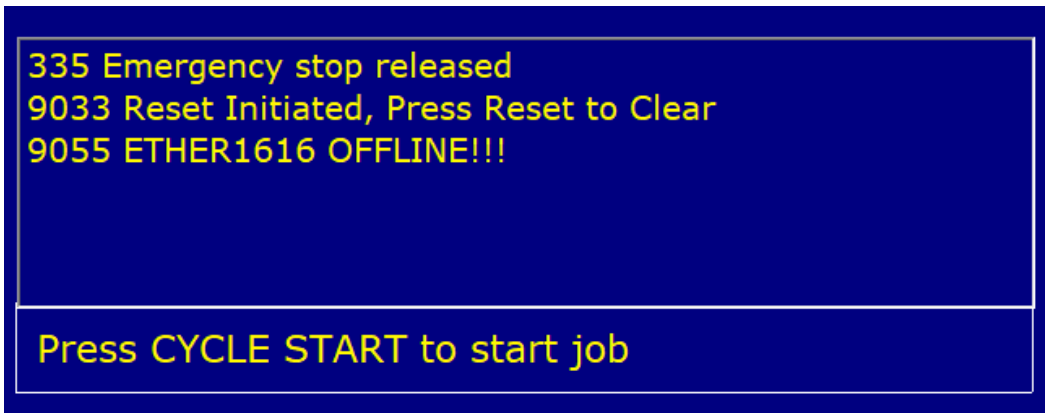

Using the CNC12 PLC diagnostic screen.

From the main screen of CNC12 bring up the PLC diagnostic screen (aka Input and Output screen),by pressing the keys <ALT> and < i> at the same time. To exit from the Input and Output screen, press the keys <ALT> and <i> again at the same time.

The CNC12 PLC diagnostic screen can be used to observe the state of any input or output.
A red Virtual LED for an input indicates that input is “open”
A green Virtual LED for an input indicates that input is “closed”

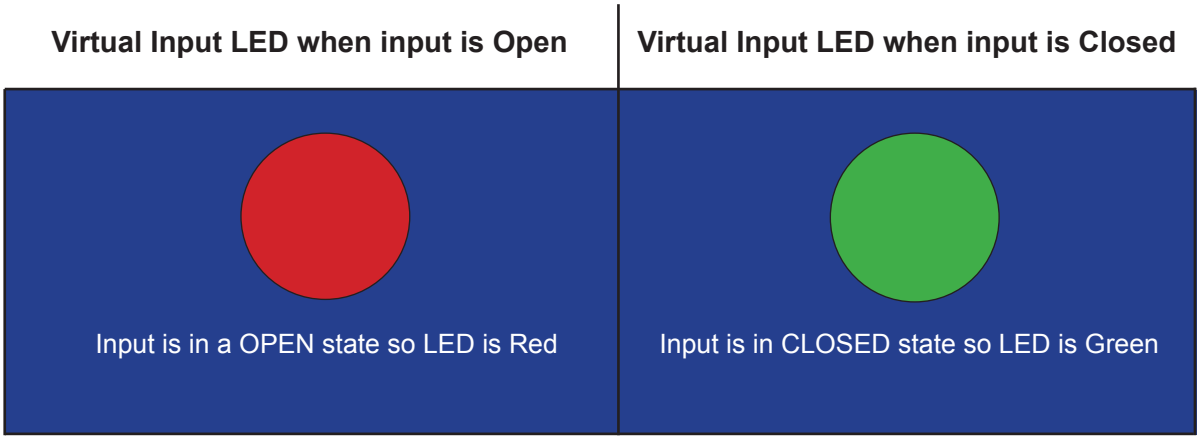

If an input in the Wizard is set to NC the PLC diagnostic LED’s appear as above.

If an input in the Wizard is set to NO the PLC diagnostic LED’s appear as below, a white line above the Virtual LED to indicates that the input has been Inverted.

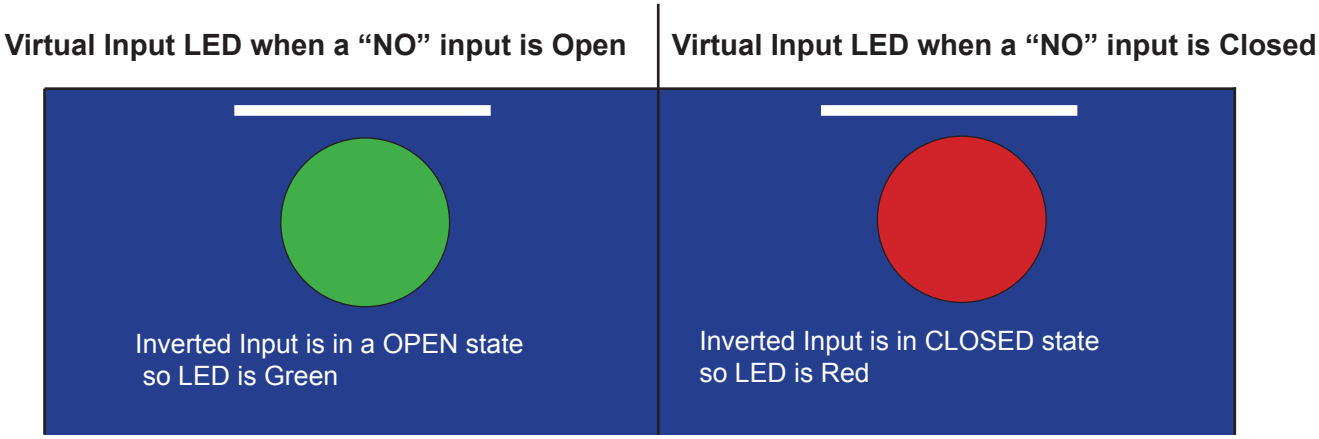

Use the arrow keys to move the PLC diagnostic cursor to highlight an input. The assigned PLC Input function name is displayed at the bottom center of the screen. In the example below an external Feed Hold button input has been assigned to Ether1616 (A0) input #9 which = CNC12 input #41. The cursor represented by a square white box is sitting on #41 and the name of the input assignment appears in the bottom middle of the screen.

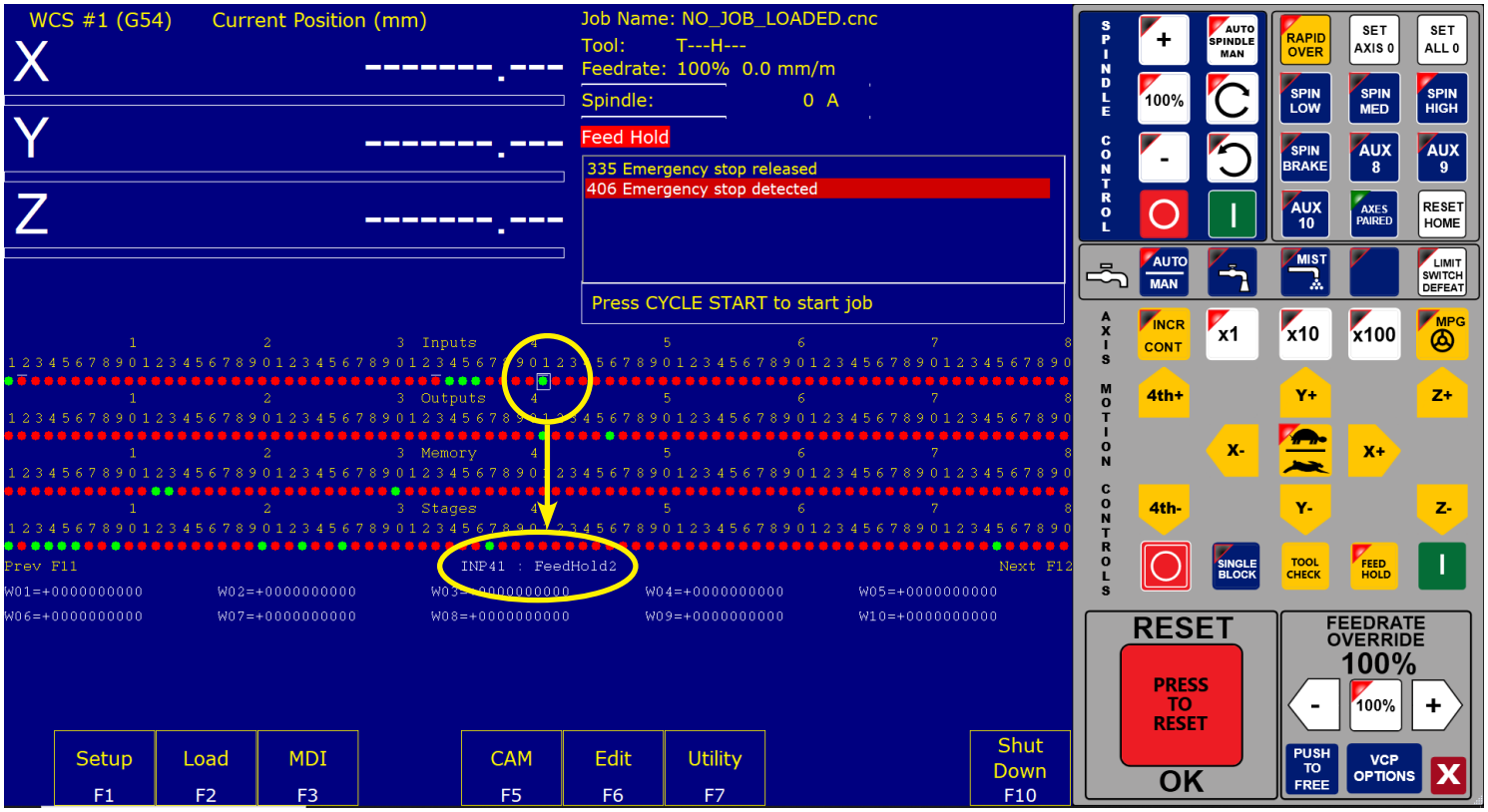

A useful tool in the PLC diagnostic screen to use while testing and setting things up is ability to manually “invert” an input directly and immediately. Move the cursor to the input number to invert, and press <CTRL>, <ALT> and <i> at the same time. Press <CTRL>, <ALT> and <i> again at the same time to cycle the input from inverted state to not inverted. A white line will appear above an input that has been inverted either manually or by the Wizard. Any input can be manually inverted whether it has been assigned a PLC function or not.

Manually inverting an input is useful when first setting up a CNC control. For instance, when you have configured an input using the Wizard but do not actually have it wired up. use the hot keys <CTRL ALT i> pressed at the same time to invert that input so the control thinks the input is wired up and is in its happy state. Press <CTRL ALT i> again to un invert the input simulating a input active or switch tripped state. Inverting an input in this manner is commonly used as a debug tool when initially configuring inputs however, the Wizard will set the input inversions properly depending on the NC (normally open) or NO (normally closed) selection made for that particular input. Be sure to return the input to its previous state when the input has been properly wired and configured with the Wizard for normal operation.

Another useful tool in the PLC diagnostic screen to use while testing and setting things up is ability to manually activate an output. Any output can be manually activated whether it has been assigned a PLC function or not. Move the cursor to the output number to activate, and press <CTRL>, <ALT> and <f> at the same time and the output activates. Press <CTRL>, <ALT> and <f> again at the same time and the output deactivates, Press <CTRL>, <ALT> and <f> again at the same time and the output returns to the normal programmed state. A white line will appear below an input that has been inverted either manually or by the Wizard.

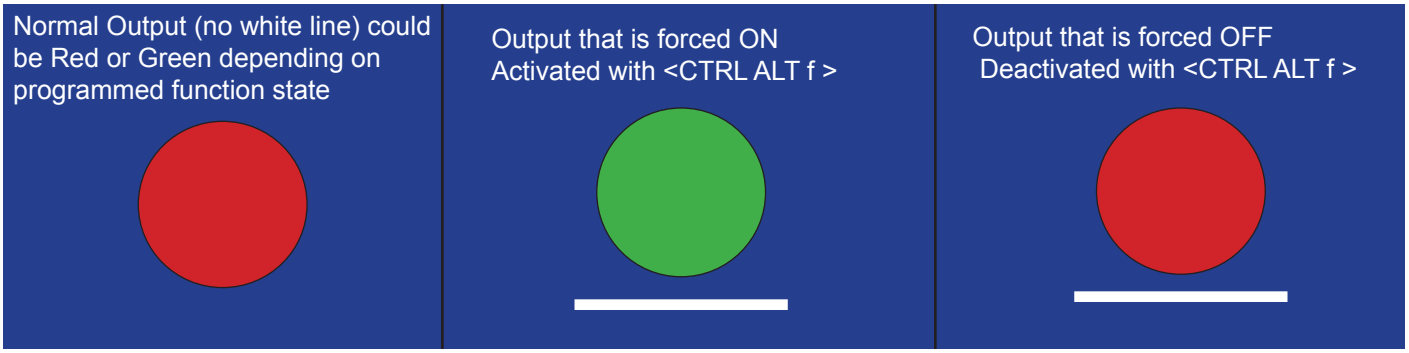

For instance if i wanted to activate the output that controls a Dust Foot attachment on a CNC router spindle to test if the output has been wired properly to the corresponding air solenoid, move the cursor to the output number that has been assigned the Dust Foot function, in the case below output 34, and press <CTRL>, <ALT> and <f> at the same time and the output activates, Press <CTRL>, <ALT> and <f> again at the same time and the output deactivates, Press <CTRL>, <ALT> and <f> again at the same time and the output returns to the normal programmed state.

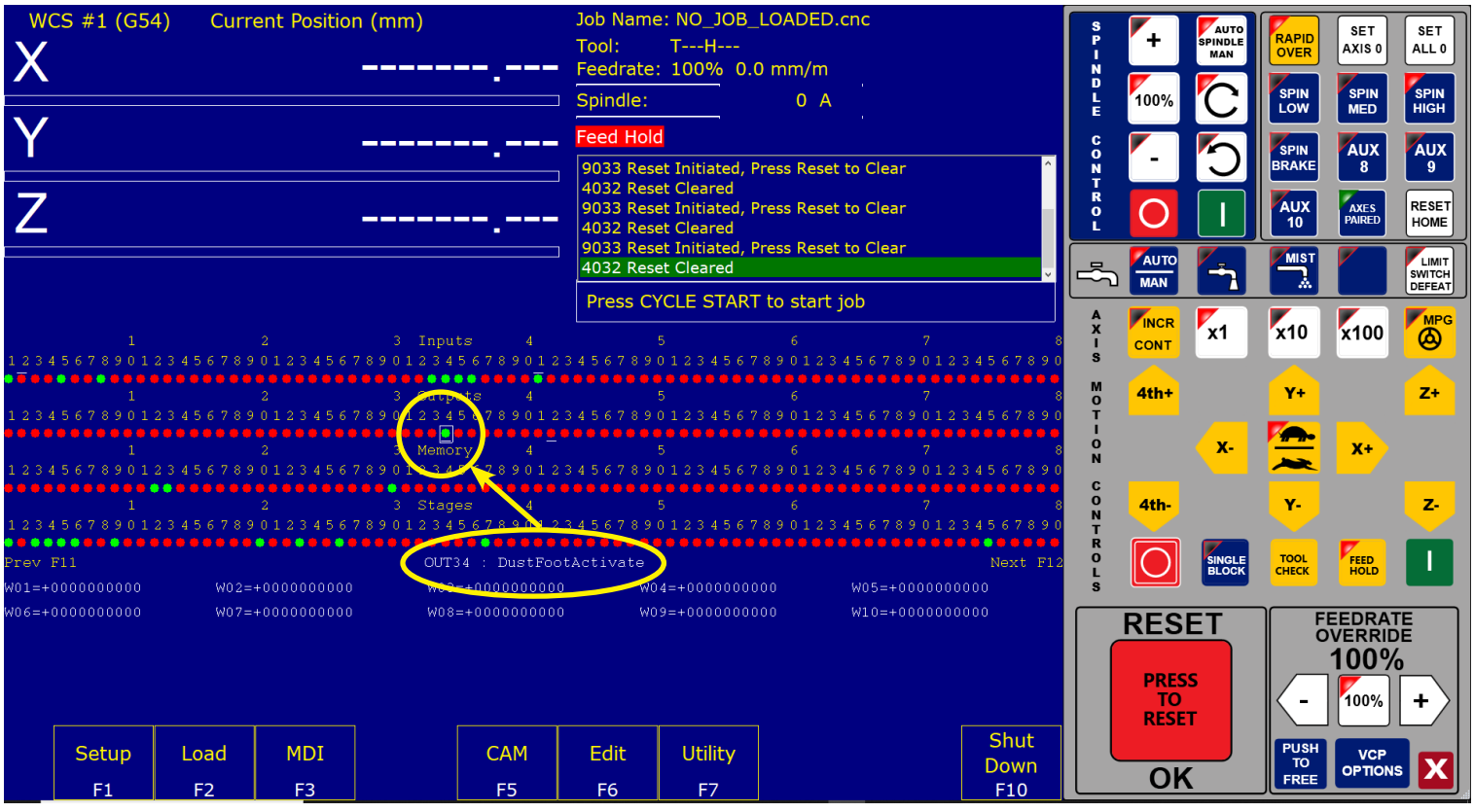

Be sure to return the output to its normal state when the output has been properly wired and configured with the Wizard for normal operation.

Using the Ether1616 with a Custom Macro

Macro Programming using M100 and M101.
Commonly used in Tool Changer Programs M100 and M101 have a wide variety of uses.

M100 and M101 work the same for Ether1616 Inputs and Outputs as they do for Acorn Inputs and Outputs.
Just be sure to use the correct CNC12 input and output numbers for the corresponding Ether1616 input and output.

CNC12 input numbers start at 50001 so, Acorn input one is 50001, input 2 is 50002, etc
CNC12 output numbers start at 60001 so Acorn output one is 60001, output 2 is 60002, etc.
See the Ether1616 input and output number chart below for the corresponding CNC12 input and output number..

Examples of “Wait for a Ether1616 input to close or open”

M101/50033 ; waits for input 1 on Ether1616 A0 to close before continuing with program
M101/50034 ; waits for input 2 on Ether1616 A0 to close before continuing with program
M100/50043 ; waits for input 11 on Ether1616 A0 to open before continuing with program

Refer to Mill Operators manual page 253 for more information on the use of M100 and M101

Ether1616 A0 Input #	1	2	3	4	5	6	7	8	9	10	11	12	13	14	15	16
CNC12 Input # (Alt i)	33	34	35	36	37	38	39	40	41	42	43	44	45	46	47	48

Ether1616 A0 Output #	1	2	3	4	5	6	7	8	9	10	11	12	13	14	15	16
CNC12 Output # (Alt i)	33	34	35	36	37	38	39	40	41	42	43	44	45	46	47	48

There are many included macros with the Acorn CNC12 software installation, most of these macros have instructions and comments built into them so they can be used as macro programming learning examples. Included macros are located in these directories “cncm”, “cnct”, “cncm/system” and “cnct/system”. Most macros end with the .mac file extension with some exceptions for special cases such as the home program files which are “cncm.hom” and “cnct.hom”
The mill operator manual has a number of sections covering macro programming. A good place to start would be to read:

CNC12 Operator Manual

Chapter 11: CNC program codes page 193
G65 Call Macro page 222
M98/99 Call Subprogram page 251
M100/M101 Wait for PLC bit page 253
M200/223,224,225,290 Formatted String page 260
Advanced Macro Statements page 202
Chapter 14 covers stock ATC macros page 265

Be sure to visit these two threads on the Acorn CNC Tech Support Forum for free downloads of custom macros for Auto-Tool Setting and ATC's

"Tool Setting Options For Routers and Mills" and "Acorn ATC Overview" in the "Acorn CNC Tech Tips Knowledge Base" forum.

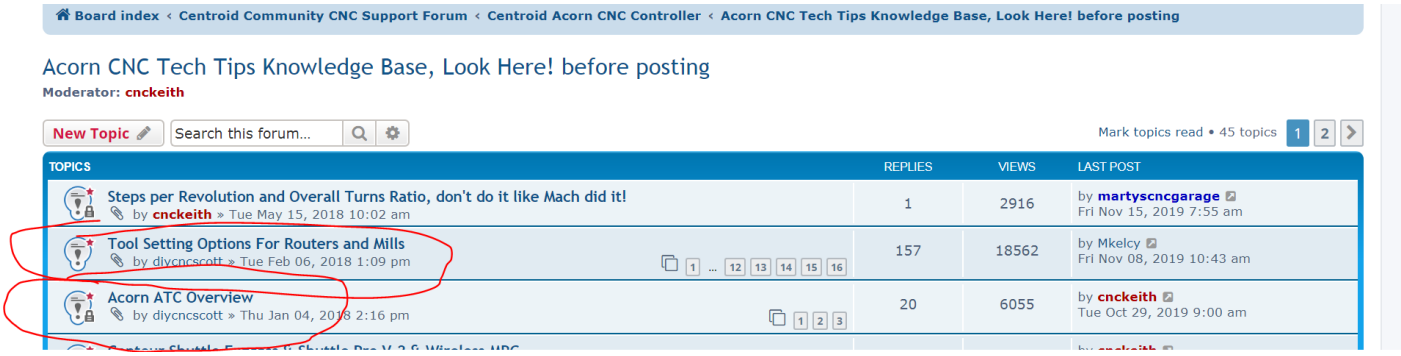

Custom PLC programming

Inputs and Outputs on the Acorn and the Ether1616 can be programmed by the Acorn setup Wizard by selecting any of the pre-programmed functions from the Input or Output list in the Wizard as covered by this document.

Alternatively, user can edit or create their own custom PLC programs. Any and all Inputs and Outputs on the Acorn and the Ether1616 are controlled by the Acorn PLC program. The Centroid PLC programming language is free and open source and can be edited with Notepad ++. Centroid also provides a free debug tool called the "PLC Detective". With these tools integrators can program any Inputs or Outputs on the Acorn board or the Ether1616 to their desired functionality by editing the Acorn PLC program.

A series of free Centroid PLC programming training videos are here on the Centroid Technical Support YouTube Channel:
https://www.youtube.com/playlist?list=PLXhs2C5No0_gFS_RmKNo7hii2WKIedQlQ
Supporting PLC programming documentation is here.
https://www.centroidcnc.com/centroid_diy/centroid_manuals.html

Appendix R: Ether1616 Input and Output Response Times

A test was conducted to find the response time of the Ether1616 board in various setups. A custom PLC was used that would activate outputs when an input was seen. An oscilloscope was used to measure the time difference on the rising edge of both input and output signals. The four setups were an Ether1616 input triggers Ether1616 output, Acorn input triggers Ether1616 output, Ether1616 input triggers Acorn output, and acorn input triggers acorn output, which will be referred to as “Ethin to Ethout”, “Acornin to EthOut”, “Ethin to Acornout”, and “Acornin to Acornout” respectively. Additional tests were also done using fast stages for the Programmable Logic Controller (PLC) program and having smoothing turned on or off to see if they had any effect on response time. A physical switch was used for all tests.

Figure 1 shows the data collected by the four different setups, delay being the delay measured on the oscilloscope between the rising edge of the input and output being triggered. Ethin to Ethout is the longest delay with an average of roughly 105ms. Both Acornin to Ethout and Ethin to Acornout had similar delay times between 40 and 50ms. Acornin to AcornOut was the shortest being roughly 15ms.

EthIn to EthOut		AcornIn to EthOut		EthIn to AcornOut		AcornIn to AcornOut	
Test#	Delay (ms)	Test#	Delay (ms)	Test#	Delay (ms)	Test#	Delay (ms)
1	105	1	37.7	1	44.9	1	7.72
2	111	2	42.5	2	29.3	2	17.7
3	106	3	25.7	3	51.7	3	13.3
4	124	4	38.1	4	64.1	4	6.12
5	99.7	5	31.3	5	17.3	5	17.7
6	110	6	47.7	6	56.5	6	14.1
7	90.5	7	64.1	7	29.3	7	11.7
8	130	8	45.7	8	42.1	8	24.1
9	80.5	9	81.3	9	50.1	9	17.7
10	94.9	10	72.1	10	44.5	10	10.9
AVG	105.16	AVG	48.62	AVG	42.98	AVG	14.104
STDEV	14.86	STDEV	18.14	STDEV	14.13	STDEV	5.37

Figure 1: Data showing four configurations and their response times without fast staging and smoothing

Figure 2 shows Acornin to AcornOut and Ethin to Ethout with both Fast Stage (FAST) and Fast stage plus smoothing (SMOOTH) enabled. The Fast Stage Reduces the average response time by 10 to 20ms, as a Fast stage is scanned every 1ms instead of every 20ms of a normal stage. Thus, the AcornIn to AcornOut response was reduced from roughly 15ms to 5ms and the Ethin to Ethout was reduced from roughly 105ms to 85ms. Smoothing appears to have little effect on response time, the Ethin to EthOut Fast & Smooth was about 10ms on average higher than Ethin to EthOut Fast, however these values are still within standard deviation of both sets of data.

AcornIn to AcornOut FAST		AcornIn to AcornOut FAST & SMOOTH		ETHIn to ETHOut FAST		ETHIn to ETHOut FAST & SMOOTH	
Test#	Delay (ms)	Test#	Delay (ms)	Test#	Delay (ms)	Test#	Delay (ms)
1	5.57	1	4.97	1	109	1	96.1
2	5.57	2	5.61	2	130	2	108
3	4.93	3	5.61	3	78.9	3	66.5
4	5.57	4	5.21	4	71.7	4	70.5
5	5.13	5	5.13	5	103	5	101
6	4.81	6	4.97	6	97.3	6	96.9
7	5.45	7	5.65	7	90.5	7	90.1
8	5.37	8	5.21	8	75.3	8	113
9	5.57	9	5.49	9	58.1	9	93.7
10	4.97	10	4.77	10	55.7	10	113
AVG	5.294	AVG	5.262	AVG	86.95	AVG	94.88
STDEV	0.30	STDEV	0.31	STDEV	23.47	STDEV	15.97

Figure 2: Data showing Acorn and Ether1616 Responses with fast staging and smoothing

Appendix R: Ether1616 Input and Output Response Times

The Ether1616 exhibits from all tests a much larger deviation than the Acorn where the average standard deviation was around 18ms for the Ether1616 and the average for Acorn was about 2ms. This is most likely due to how the Ether1616 interacts with the PC and Acorn. The Acorn only has to send and receive messages from the PC, thus its response and possible wait times for data to be collected and transmitted are minimal. However, the Ether1616 must communicate with the Acorn, and it has to send it through a “middleman” the PC. So when an input is tripped, the Ether1616 sends that signal to the PC, PC forwards message to Acorn, Acorn then sends it back to PC, then PC sends the information back to Ether1616. Along the way the message may have to wait at each “stop” causing the increase in variation of response.

Fast Stage:
This test included the use of Fast Stages to see the effects of using this feature in the PLC and what effects it had on the overall response time. All PLC by default is scanned by the acorn 50 times a second. Changes between the scan times will wait for the next PLC scan to take effect. For time critical plc logic, we can set up a Fast Stage in the PLC. What ever code written within this Fast Stage will be scanned 1000 times a second instead of 50. I used Fast Staging as a way to determine experimentally the pure response time of the Ether1616 and Acorn system its self without the “wait time” of PLC, hence time critical logic.

The use of Fast Stages reduces the response time by 10 to 20ms. Most I/O would see very limited benefit from this reduction in response, however fast stages would be useful in any situations where particular logic has to happen within the 20ms of the normal scan rate. One possible use for Fast Stages can be for safety switches or sensors. Programming such safety features into a fast stage would stop the machine roughly 10 to 20ms faster. Additionally, fast stages would be useful for orienting a spindle or carousel in some cases. For Example, The IO2PLC board developed by Centroid has hard coded “Fast I/O” that operates similar to a fast stage. It was used for cases where a carousel would rotate to position and needed a brake applied once oriented. But due to the time delay in communication, the carousel would overshoot. Fast stages fulfill the same role without the need to be hard coded, which gives the freedom to choose the logic which we desire to be fast.

Conclusion:
The end result appears that the Ether1616 has approximately a 5x slower response time than the Acorn, largely due to how it must communicate. Combining all data for the Ether1616 response times we get an average of roughly 96ms with a standard deviation of 19.4ms. The minimum and maximum values in the test sample were 55.7 and 130ms. With these values in mind, a Response range of 50 to 140ms with the average being 95ms seems appropriate. With this relatively larger response time, time dependent inputs or outputs should be reserved to be used on the Acorn such as “Estop”. Probe inputs and Estop outputs would be recommended to be on the Acorn.

Some ways to best mitigate this longer response time is to alternate between the Ether1616 and the Acorn for inputs/outputs that trigger each other. If an input on the acorn triggers an output, said output should be on the Ether1616. This assumes we are going to exceed the 8 input/output limit of the acorn. This will reduce overall response time between said input and output to roughly 40 to 50ms or about 3x of that of acorn, as the Acornin to Ethout and Ethin to Acornout shows in Figure 1. Other possible options is to put inputs or outputs that do not require an action from the Acorn, so an input that triggers PLC code that does something not connected to the Acorn, or pressing an aux key on the Virtual Control Panel that activates an output. These actions will most likely fall into the 40 to 50ms response range as well.

E-STOP CIRCUITS ARE RED
OPTIONAL CONNECTIONS ARE BLUE
GROUNDS ARE GREEN
110VAC IS VIOLET

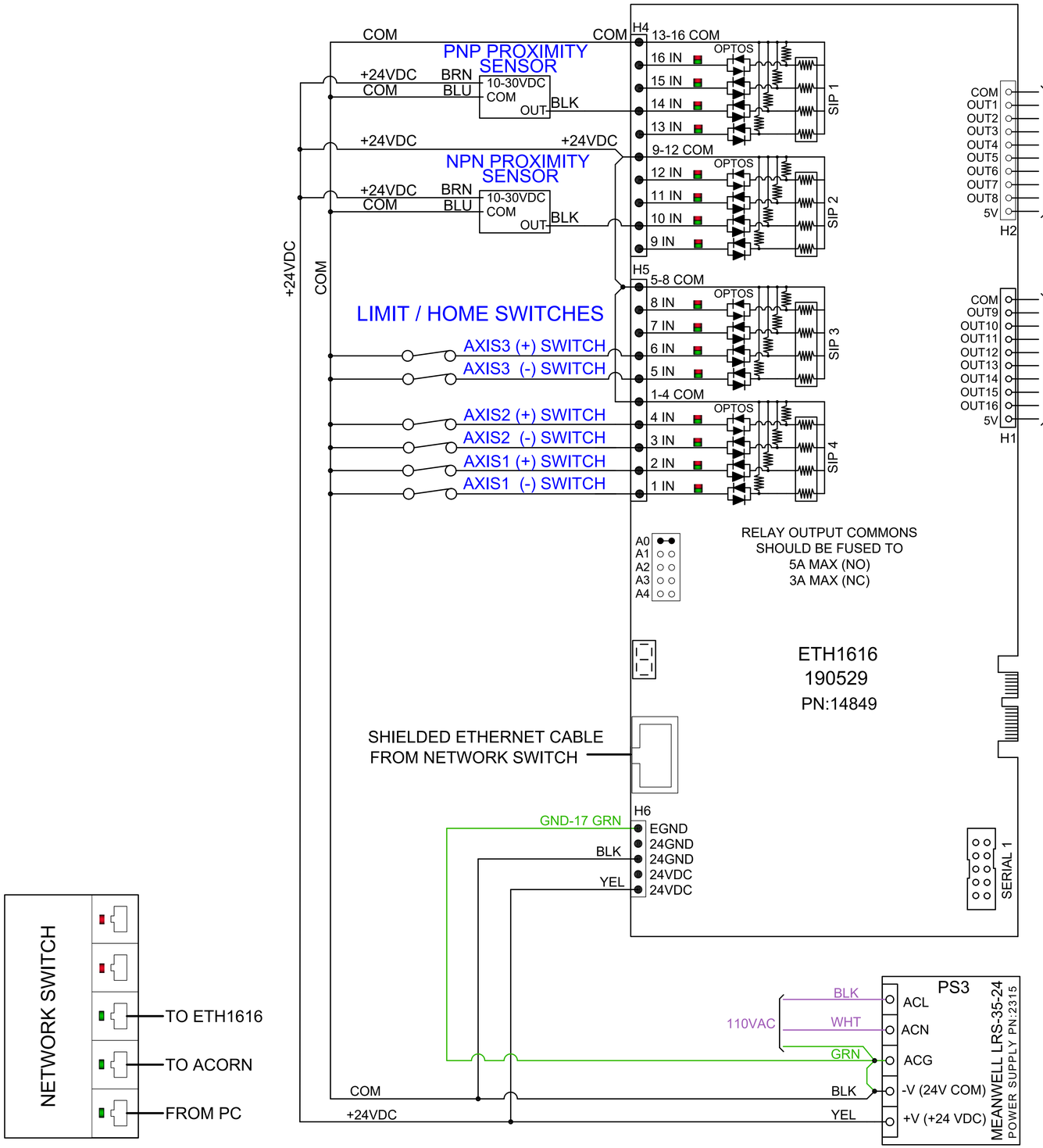

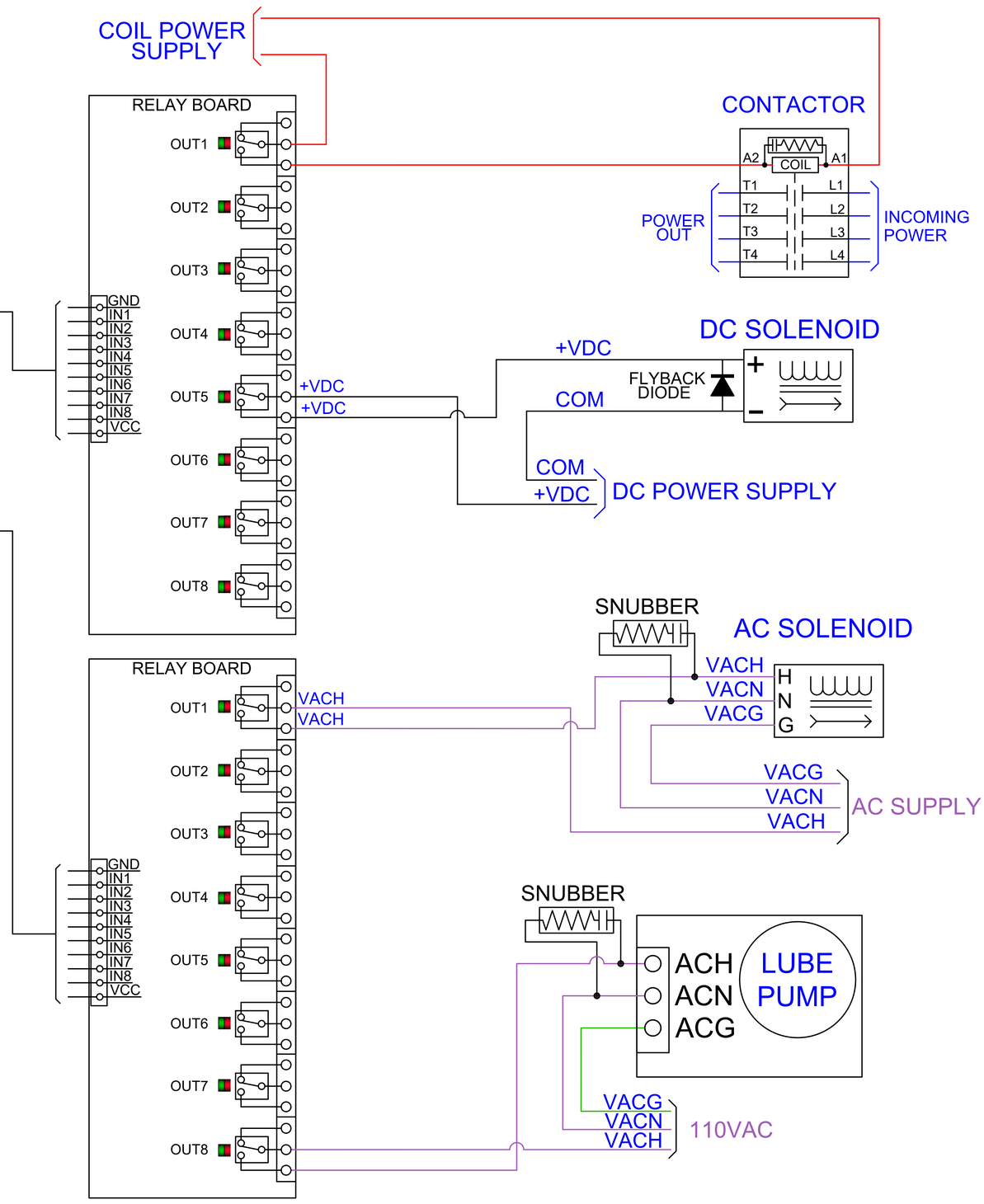

Title: ETHER1616, TYPICAL CONNECTIONS		
Date: 190905	Ver: 1	Drawn by: CEM
Filename: S15004.DWG		Sheet 1 of 1

Title: ETHER1616, 1PHASE TO 3PHASE MOTOR CONNECTIONS		
Date: 191202	Ver: 3	Drawn by: CEM
Filename: S15005.DWG		Sheet 1 of 1

NETWORK SWITCH
TO ETH1616
TO ACORN
FROM PC

H4 13-16 COM OPTOS
16 IN
15 IN
14 IN
13 IN
SIP 1
9-12 COM OPTOS
12 IN
11 IN
10 IN
9 IN
SIP 2
H5 5-8 COM OPTOS
8 IN
7 IN
6 IN
5 IN
SIP 3
1-4 COM OPTOS
4 IN
3 IN
2 IN
1 IN
SIP 4

RELAY OUTPUT COMMONS
SHOULD BE FUSED TO
5A MAX (NO)
3A MAX (NC)

A0
A1
A2
A3
A4

ETH1616
190529
PN:14849

SHIELDED ETHERNET CABLE
FROM NETWORK SWITCH

H6
GRN EGND
BLK 24GND
YEL 24VDC
24VDC
SERIAL 1

COM
OUT1
OUT2
OUT3
OUT4
OUT5
OUT6
OUT7
OUT8
5V
H2

COM
OUT9
OUT10
OUT11
OUT12
OUT13
OUT14
OUT15
OUT16
5V
H1

RELAY BOARD
OUT1
OUT2
OUT3
OUT4
OUT5
OUT6
OUT7
OUT8
GND
IN1
IN2
IN3
IN4
IN5
IN6
IN7
IN8
VCC

RELAY BOARD
OUT1
OUT2
OUT3
OUT4
OUT5
OUT6
OUT7
OUT8
GND
IN1
IN2
IN3
IN4
IN5
IN6
IN7
IN8
VCC

PS3
110VAC
BLK ACL
WHT ACN
GRN ACG
BLK -V (24V COM)
YEL +V (+24 VDC)
MEANWELL LRS-35-24
POWER SUPPLY PN:2315

UNIDIRECTIONAL MOTOR

SINGLE PHASE POWER
L1 L2 L3 G
AUTOMATION DIRECT GS1
CM = VFD INPUT COM
DI1 = RUN FORWARD
+
R 1 D D D D
R 1 0 A I I I I C
1 0 V 1 1 2 3 4 M
SpinFWD
RUN FORWARD
VFD COMMON
T1 T2 T3 G
MOTOR L1 L2 L3 FG

BIDIRECTIONAL MOTOR

SINGLE PHASE POWER
L1 L2 L3 G
AUTOMATION DIRECT GS1
CM = VFD INPUT COM
DI1 = RUN FORWARD
DI2 = RUN REVERSE
DI3 = FAULT RESET
+
R 1 D D D D
R 1 0 A I I I I C
1 0 V 1 1 2 3 4 M
VFD COMMON
VFDResetOut
VFD COMMON
VFDEnable
VFDEnable
VFDDirection
FAULT RESET
VFD COMMON
RUN FORWARD
RUN REVERSE
T1 T2 T3 G
MOTOR L1 L2 L3 FG

OPTIONAL CONNECTIONS ARE BLUE
GROUNDS ARE GREEN
110VAC IS VIOLET

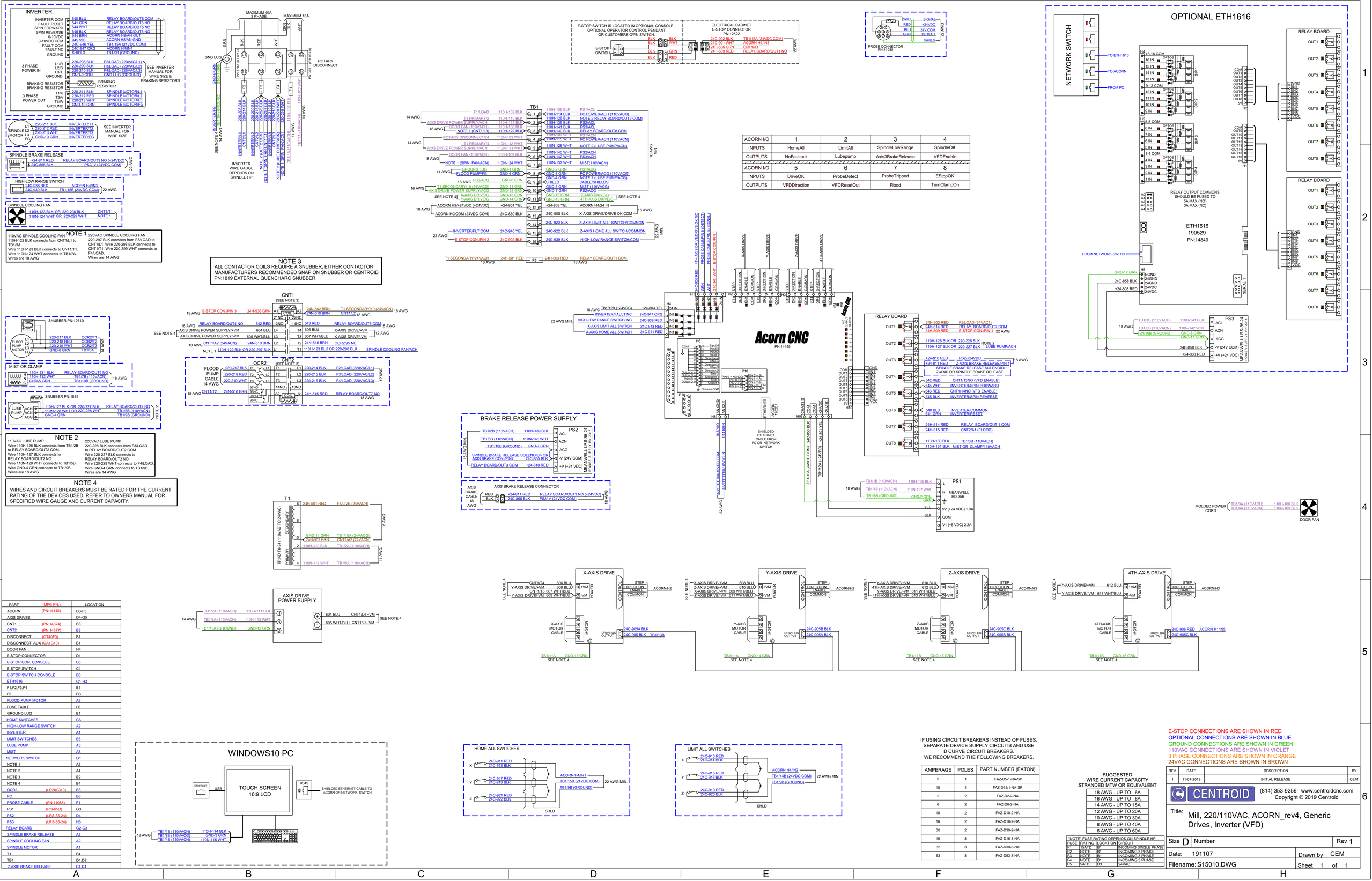
INVERTER
INVERTER COM 540 BLU RELAY BOARD/OUT6 COM
FAULT RESET 541 GRN RELAY BOARD/OUT6 NO
SPIN FORWARD 544 WHT RELAY BOARD/OUT5 NC
SPIN REVERSE 545 BLK RELAY BOARD/OUT5 NO
0-10VDC 344 BRN ACORN H5/AN OUT
0-10VDC COM 345 VIO ACORN H5/AN GND
FAULT COM 24C-946 YEL TB1/15A (24VDC COM)
FAULT NC 24C-947 ORG ACORN H4/IN4
GROUND SHIELD TB1/9B (GROUND)
3 PHASE POWER IN L1/R 220-208 BLK F2/LOAD (220VAC/L1)
L2/S 220-209 BLK F3/LOAD (220VAC/L2)
L3/T 220-210 BLK F4/LOAD (220VAC/L3)
GROUND GND-9 GRN GND LUG (GROUND)
SEE INVERTER MANUAL FOR WIRE SIZE & BRAKING RESISTORS
BRAKING RESISTOR
BRAKING RESISTOR
3 PHASE POWER OUT T1/U 220-211 BLK SPINDLE MOTOR/L1
T2/V 220-212 RED SPINDLE MOTOR/L2
T3/W 220-213 WHT SPINDLE MOTOR/L3
GROUND GND-10 GRN SPINDLE MOTOR/FG
SPINDLE MOTOR L1 220-211 BLK INVERTER/T1
L2 220-212 RED INVERTER/T2
L3 220-213 WHT INVERTER/T3
FG GND-10 GRN INVERTER/FG
SEE INVERTER MANUAL FOR WIRE SIZE
SPINDLE BRAKE RELEASE
+24-811 RED RELAY BOARD/OUT3 NO (+24VDC)
24C-855 BLK PS2/-V (24VDC COM)
22 AWG
HIGH-LOW RANGE SWITCH
24C-938 RED ACORN H4/IN3
24C-939 BLK TB1/15B (24VDC COM)
22 AWG
SPINDLE COOLING FAN
110H-123 BLK OR 220-298 BLK CNT1/T1
110N-124 WHT OR 220-299 WHT NOTE 1
NOTE 1
110VAC SPINDLE COOLING FAN
110H-122 BLK connects from CNT1/L1 to TB1/3A.
Wire 110H-123 BLK connects to CNT1/T1.
Wire 110N-124 WHT connects to TB1/7A.
Wires are 18 AWG
220VAC SPINDLE COOLING FAN
220-297 BLK connects from F3/LOAD to CNT1/L1. Wire 220-298 BLK connects to CNT1/T1. Wire 220-299 WHT connects to F4/LOAD.
Wires are 14 AWG
SNUBBER PN:12610
FLOOD PUMP MOTOR L1 220-217 BLK OCR2/T1
L2 220-218 RED OCR2/T2
L3 220-219 WHT OCR2/T3
FG GND-6 GRN TB1/8A
NOTE 2
MIST OR CLAMP
110H-131 BLK RELAY BOARD/OUT4 NO
110N-132 WHT TB1/7B (110VACN)
GND-5 GRN TB1/10B (GROUND)
18 AWG
SNUBBER PN:1819
LUBE PUMP ACH 110H-127 BLK OR 220-227 BLK RELAY BOARD/OUT2 NO
ACN 110N-128 WHT OR 220-228 WHT TB1/5B (110VACN)
ACG GND-4 GRN TB1/9B (GROUND)
NOTE 2
NOTE 2
110VAC LUBE PUMP
Wire 110H-126 BLK connects from TB1/2B to RELAY BOARD/OUT2 COM.
Wire 110H-127 BLK connects to RELAY BOARD/OUT2 NO.
Wire 110N-128 WHT connects to TB1/5B.
Wire GND-4 GRN connects to TB1/9B.
Wires are 18 AWG
220VAC LUBE PUMP
220-226 BLK connects from F3/LOAD to RELAY BOARD/OUT2 COM
Wire 220-227 BLK connects to RELAY BOARD/OUT2 NO.
Wire 220-228 WHT connects to F4/LOAD.
Wire GND-4 GRN connects to TB1/9B.
Wires are 14 AWG
NOTE 4
WIRES AND CIRCUIT BREAKERS MUST BE RATED FOR THE CURRENT RATING OF THE DEVICES USED. REFER TO OWNERS MANUAL FOR SPECIFIED WIRE GAUGE AND CURRENT CAPACITY.
MAXIMUM 40A 3 PHASE
MAXIMUM 16A
GRN
WHT
BLK
RED
GND LUG
GND-9 GRN
GND-1 GRN
PN:17413 (17 HOLE)
PN:29317 (10X15HOLE)
ROTARY DISCONNECT
F5
F3
F4
F2
F1
220-208 BLK
220-209 BLK
220-210 BLK
220-297 BLK
220-298 WHT
220-299 WHT
110H-102 BLK
110N-103 WHT
110N-104 WHT
14 AWG
SEE NOTE 4
INVERTER/FG
TB1/9A (GROUND)
INVERTER/L1
INVERTER/L2
INVERTER/L3
NOTE 3 THRU A 2.5MF/600VAC
NOTE 2 LUBE PUMP/ACH
NOTE 2 LUBE PUMP/ACN
TB1/1A (110VACH)
TB1/1B (110VACN)
INVERTER WIRE GAUGE DEPENDS ON SPINDLE HP
E-STOP SWITCH IS LOCATED IN OPTIONAL CONSOLE, OPTIONAL OPERATOR CONTROL PENDANT OR CUSTOMERS OWN SWITCH.
E-STOP SWITCH
BLK BLK
BLK WHT
BLK GRN
BLK RED
ELECTRICAL CABINET E-STOP CONNECTOR PN:12522
24C-902 BLK TB1/16A (24VDC COM)
24C-901 WHT ACORN H1/IN8
24H-536 GRN CNT1/L1
24H-509 RED RELAY BOARD/OUT1 NO
22 AWG
PROBE CONNECTOR PN:11085
WHT SIGNAL
RED +24VDC
BLU 24V COM
GRN DETECT
SHIELD
22 AWG
TB1
F5/LOAD (24VAC1)
F6/LOAD (24VAC2)
110H-106 BLK PS1/ACL
110H-114 BLK PC POWER/ACH (110VACH)
110H-126 BLK NOTE 2 RELAY BOARD/OUT2 COM)
110H-139 BLK PS2/ACL
110H-141 BLK PS3/ACL
110H-130 BLK RELAY BOARD/OUT8 COM
110H-107 WHT PS1/ACN
110N-115 WHT PC POWER/ACN (110VACN)
110N-128 WHT NOTE 2 (LUBE PUMP/ACN)
110N-140 WHT PS2/ACN
110N-142 WHT PS3/ACN
110N-132 WHT MIST(110VACN)
GND-2 GRN PS1/ACG
GND-3 GRN PC POWER/ACG (110VACG)
GND-4 GRN NOTE 2 (LUBE PUMP/ACG)
SHIELD CABLE SHIELDS
GND-5 GRN MIST (110VACG)
GND-7 GRN PS2/ACG
GND-15 GRN Z-AXIS DRIVE/G
GND-16 GRN 4TH-AXIS DRIVE/G
SEE NOTE 4
16 AWG MIN.
ACORN H9/+24VDC (+24VDC) +24-801 YEL
ACORN H9/COM (24VDC COM) 24C-850 BLK
+24-803 YEL ACORN H4/24 IN
18 AWG
24C-905 BLK X-AXIS DRIVE/DRIVE OK COM
24C-920 BLK Z-AXIS LIMIT ALL SWITCH/COMMON
24C-922 BLK Z-AXIS HOME ALL SWITCH/COMMON
24C-939 BLK HIGH-LOW RANGE SWITCH/COM
22 AWG MIN.
INVERTER/FLT COM 24C-946 YEL
E-STOP CON./PIN 2 24C-902 BLK
T1 SECONDARY/24VAC 24H-501 RED F5 24H-503 RED RELAY BOARD/OUT1 COM
16 AWG 18 AWG
NOTE 3
ALL CONTACTOR COILS REQUIRE A SNUBBER, EITHER CONTACTOR MANUFACTURERS RECOMMENDED SNAP ON SNUBBER OR CENTROID PN:1819 EXTERNAL QUENCHARC SNUBBER.
CNT1
(SEE NOTE 3)
E-STOP CON./PIN 3 24H-536 GRN
21NC 22NC
RELAY BOARD/OUT4 NO 542 RED
13NO 14NO
A-AXIS DRIVE SUPPLY/+VM 604 BLU
A-AXIS DRIVE POWER SUPPLY/-VM 605 WHT/BLU
CNT1/A2 (24VAC) 24N-510 BRN
110H-123 BLK OR 220-297 BLK
T1 SECONDARY/10 (24VACN) 16 AWG
24N-502 BRN CNT1/L2 18 AWG
543 RED RELAY BOARD/OUT5 COM
606 BLU X-AXIS DRIVE/+VM
607 WHT/BLU X-AXIS DRIVE/-VM
12 AWG
24N-516 BRN OCR2/95 NC
SPINDLE COOLING FAN/ACH
SEE NOTE 4
OCR2
(SEE NOTE 3)
FLOOD PUMP CABLE 14 AWG
220-217 BLK
220-218 RED
220-219 WHT
97NO 98NC 99NC
CNT1/T2 24N-516 BRN
220-214 BLK F2/LOAD (220VAC/L1)
220-215 BLK F3/LOAD (220VAC/L2)
220-216 BLK F4/LOAD (220VAC/L3)
14NO 13NO
A1 24H-515 RED RELAY BOARD/OUT7 NO
18 AWG
12 AWG
BRAKE RELEASE POWER SUPPLY
TB1/2B (110VACH) 110H-139 BLK
TB1/8B (110VACN) 110N-140 WHT
TB1/10B (GROUND) GND-7 GRN
SPINDLE BRAKE RELEASE SOLENOID/- OR AXIS BRAKE CON./PIN2 24C-855 BLK
RELAY BOARD/OUT3 COM +24-810 RED
PS2
ACL
ACN
ACG
-V (24V COM)
+V (+24 VDC)
MEANWELL LRS-35-24
POWER SUPPLY P/N 2315
18 AWG MIN.
22 AWG
AXIS BRAKE CONNECTOR
AXIS BRAKE CABLE 18 AWG
RED +24-811 RED RELAY BOARD/OUT3 NO (+24VDC)
BLK 24C-855 BLK PS2/-V (24VDC COM)
18 AWG
T1
TRIAD FB-24 (110VAC TO 24VAC)
PRIMARY
SECONDARY
6 24H-501 RED F5/LIVE (24VACH)
8
10 GND-11 GRN TB1/10A (24VACG)
24N-502 BRN CNT1/A2 (24VACN)
2 110H-110 BLK TB1/2A (110VACH)
4 110N-112 WHT TB1/5A (110VACN)
16 AWG
14 AWG
AXIS DRIVE POWER SUPPLY
14 AWG TB1/2A (110VACH) 110H-111 BLK
TB1/5A (110VACN) 110N-113 WHT
TB1/10A (GROUND) GND-12 GRN
604 BLU CNT1/L4 +VM
605 WHT/BLU CNT1/L3 -VM
SEE NOTE 4
ACORN CNC
PN:14445
ACORN I/O
1 HomeAll
2 LimitAll
3 SpindleLowRange
4 SpindleOK
NoFaultout
Lubepump
Axis3BrakeRelease
VFDEnable
5 DriveOK
6 ProbeDetect
7 ProbeTripped
8 EStopOK
VFDDirection
VFDResetOut
Flood
TurnClampOn
TL-SOC RED 4TH-AXIS DRIVE/DRIVE OK NC
GRN PROBE CABLE/PIN 6 (DETECT)
WHT PROBE CABLE/PIN 5 (SIGNAL)
24C-901 WHT E-STOP CON./PIN 1
X-AXIS DRIVE
Y-AXIS DRIVE
Z-AXIS DRIVE
4TH-AXIS DRIVE
STEP
DIRECTION
ENABLE
COMMON
H1
H2
H3
H4
H5
H6
H7
H8
H9
H10
P1
P2
P3
P10
IN1
IN2
IN3
IN4
24 IN
Input 1
Input 2
Input 3
Input 4
Direction 1
Direction 2
Direction 3
Direction 4
Output 1
Output 2
Output 3
Output 4
Chassis GND
ETHERNET
SHIELDED ETHERNET CABLE FROM PC OR NETWORK SWITCH
AN GND
AN OUT
CHASSIS
COM
+24VDC
345 VIO
344 BRN
24C-850 BLK
24C-801 YEL
+24-801 YEL
INVERTER/BRD-10VDC COM
INVERTER/BRD-10VDC IN
TB1/13A (24VDC COM)
TB1/12A (+24VDC)
RELAY BOARD
OUT1 24H-503 RED F5/LOAD (24VAC1)
24H-514 RED RELAY BOARD/OUT7 COM
24H-509 RED E-STOP CON./PIN 1 22 AWG
110H-126 BLK OR 220-226 BLK NOTE 2
110H-127 BLK OR 220-227 BLK LUBE PUMP/ACH
OUT3 +24-810 RED PS2/+24VDC
+24-811 RED Z-AXIS BRAKE RELEASE/PIN 1
SPINDLE BRAKE RELEASE SOLENOID/+
Z-AXIS OR SPINDLE BRAKE RELEASE
18 AWG
OUT4 542 RED CNT1/13NO (VFD ENABLE)
544 WHT INVERTER/SPIN FORWARD
543 RED CNT1/14NO (VFD ENABLE)
OUT5 545 BLK INVERTER/SPIN REVERSE
OUT6 540 BLU INVERTER/COMMON
541 GRN INVERTER/RESET
OUT7 24H-514 RED RELAY BOARD/OUT 1 COM
24H-515 RED CNT2/A1 (FLOOD)
OUT8 110H-130 BLK TB1/3B (110VACH)
110H-131 BLK MIST OR CLAMP/110VACH
TB1/1B (110VACH) 110H-106 BLK
TB1/4B (110VACN) 110N-107 WHT
TB1/8B (GROUND) GND-2 GRN
18 AWG
PS1
L
N
MEANWELL RD-35B
GND
YEL V2 (+24 VDC) 1.0A
BLK COM
V1 (+5 VDC) 2.2A
IF USING CIRCUIT BREAKERS INSTEAD OF FUSES, SEPARATE DEVICE SUPPLY CIRCUITS AND USE D CURVE CIRCUIT BREAKERS.
WE RECOMMEND THE FOLLOWING BREAKERS.
AMPERAGE POLES PART NUMBER (EATON)
5 1 FAZ-D5-1-NA-SP
15 1 FAZ-D15/1-NA-SP
2 2 FAZ-D2-2-NA
6 2 FAZ-D6-2-NA
10 2 FAZ-D10-2-NA
16 2 FAZ-D16-2-NA
30 2 FAZ-D30-2-NA
16 3 FAZ-D16-3-NA
32 3 FAZ-D30-3-NA
63 3 FAZ-D63-3-NA
SUGGESTED WIRE CURRENT CAPACITY STRANDED MTW OR EQUIVALENT
18 AWG - UP TO 6A
16 AWG - UP TO 8A
14 AWG - UP TO 15A
12 AWG - UP TO 20A
10 AWG - UP TO 30A
8 AWG - UP TO 40A
6 AWG - UP TO 60A
"NOTE" FUSE RATING DEPENDS ON SPINDLE HP
FUSE RATING LOCATION CIRCUIT
F1 15ATD B1 INCOMING SINGLE PHASE
F2 NOTE B1 INCOMING 3 PHASE
F3 NOTE B1 INCOMING 3 PHASE
F4 NOTE B1 INCOMING 3 PHASE
F5 5ATD D3 24VAC
OPTIONAL ETH1616
NETWORK SWITCH
TO ETH1616
TO ACORN
FROM PC
RELAY BOARD
OUT1
OUT2
OUT3
OUT4
OUT5
OUT6
OUT7
OUT8
H4
13-16 COM
16 IN
15 IN
14 IN
13 IN
9-12 COM
12 IN
11 IN
10 IN
9 IN
H5
5-8 COM
8 IN
7 IN
6 IN
5 IN
1-4 COM
4 IN
3 IN
2 IN
1 IN
OPTO22
SSR 1
SSR 2
SSR 3
SSR 4
COM
5V
H2
H1
RELAY OUTPUT COMMONS SHOULD BE FUSED TO 5A MAX (NO) 3A MAX (NC)
A0
A1
A2
A3
A4
ETH1616
190529
PN:14849
FROM NETWORK SWITCH
H6
EGND
24GND
24GND
24VDC
24VDC
GND-17 GRN
24C-858 BLK
+24-808 RED
SERIAL 1
TB1/3B (110VACH) 110H-141 BLK
TB1/6B (110VACN) 110N-142 WHT
TB1/10B (GROUND) GND-8 GRN
GND-17 GRN
24C-858 BLK
+24-808 RED
PS3
ACL
ACN
ACG
-V (24V COM)
+V (+24 VDC)
MEANWELL LRS-35-24
POWER SUPPLY P/N 2315
MOLDED POWER CORD
TB1/2A (110VACH) 110H-108 BLK
TB1/6A (110VACN) 110N-109 BLK
DOOR FAN
PART (MFG PN:) LOCATION
ACORN (PN:14445) D3-F3
AXIS DRIVES D4-G5
CNT1 (PN:14374) B3
CNT2 (PN:14377) B3
DISCONNECT (OT40F3) B1
DISCONNECT, AUX (OA1G10) B1
DOOR FAN H4
E-STOP CONNECTOR D1
E-STOP CON. CONSOLE B6
E-STOP SWITCH C1
E-STOP SWITCH CONSOLE B6
ETH1616 G1-H3
F1,F2,F3,F4 B1
F5 D3
FLOOD PUMP MOTOR A3
FUSE TABLE F6
GROUND LUG B1
HOME SWITCHES C6
HIGH-LOW RANGE SWITCH A2
INVERTER A1
LIMIT SWITCHES E6
LUBE PUMP A3
MIST A3
NETWORK SWITCH G1
NOTE 1 A2
NOTE 2 A4
NOTE 3 B2
NOTE 4 B4
OCR2 (LR2K0310) B3
PC B6
PROBE CABLE (PN:11085) F1
PS1 (RQ-65D) G3
PS2 (LRS-35-24) D4
PS3 (LRS-35-24) H3
RELAY BOARD G2-G3
SPINDLE BRAKE RELEASE A2
SPINDLE COOLING FAN A2
SPINDLE MOTOR A1
T1 B4
TB1 D1,D2
Z-AXIS BRAKE RELEASE C4,D4
WINDOWS10 PC
ETHERNET
USB
TOUCH SCREEN 16:9 LCD
RJ45
SHIELDED ETHERNET CABLE TO ACORN OR NETWORK SWITCH
18 AWG
TB1/1B (110VACH) 110H-114 BLK
TB1/8B (110VACG) GND-3 GRN
TB1/4B (110VACN) 110N-115 WHT
HOME ALL SWITCHES
X 24C-911 RED 24C-912 BLK
Y 24C-917 RED 24C-918 BLK
Z 24C-921 RED 24C-922 BLK
ACORN H4/IN1
TB1/15B (24VDC COM)
TB1/9B (GROUND)
22 AWG MIN.
SHLD
LIMIT ALL SWITCHES
X 24C-913 RED 24C-914 BLK
Y 24C-915 RED 24C-916 BLK
Z 24C-919 RED 24C-920 BLK
ACORN H4/IN2
TB1/14B (24VDC COM)
TB1/9B (GROUND)
22 AWG MIN.
SHLD
X-AXIS DRIVE
Y-AXIS DRIVE
Z-AXIS DRIVE
4TH-AXIS DRIVE
SEE NOTE 4
CNT1/T4 606 BLU
X-AXIS DRIVE/+VM 608 BLU
X-AXIS DRIVE/-VM 609 WHT/BLU
CNT1/T3 607 WHT/BLU
Y-AXIS DRIVE/+VM 610 BLU
4TH-AXIS DRIVE/+VM 612 BLU
Y-AXIS DRIVE/-VM 611 WHT/BLU
4TH-AXIS DRIVE/-VM 613 WHT/BLU
Z-AXIS DRIVE/+VM 608 BLU
Z-AXIS DRIVE/-VM 611 WHT/BLU
+VM
-VM
POWER
CONTROL
STEP
DIRECTION
ENABLE
COMMON
ACORN/H2
ACORN/H3
X-AXIS MOTOR CABLE
Y-AXIS MOTOR CABLE
Z-AXIS MOTOR CABLE
4TH-AXIS MOTOR CABLE
MOTOR
DRIVE OK OUTPUT
24C-905A BLK
24C-905 BLK TB1/13B
24C-905B BLK
24C-905A BLK
24C-905C BLK
24C-905B BLK
24C-906 RED ACORN H1/IN5
24C-905C BLK
TB1/11A GND-13 GRN
TB1/11A GND-14 GRN
TB1/11B GND-15 GRN
TB1/11B GND-16 GRN
E-STOP CONNECTIONS ARE SHOWN IN RED
OPTIONAL CONNECTIONS ARE SHOWN IN BLUE
GROUND CONNECTIONS ARE SHOWN IN GREEN
110VAC CONNECTIONS ARE SHOWN IN VIOLET
3 PHASE CONNECTIONS ARE SHOWN IN ORANGE
24VAC CONNECTIONS ARE SHOWN IN BROWN
REV DATE DESCRIPTION BY
1 11-07-2019 INITIAL RELEASE CEM
CENTROID (814) 353-9256 www.centroidcnc.com
Copyright © 2019 Centroid
Title: Mill, 220/110VAC, ACORN_rev4, Generic Drives, Inverter (VFD)
Size D Number Rev 1
Date: 191107 Drawn by CEM
Filename: S15010.DWG Sheet 1 of 1

Title: ETHER1616, XCS-TE Door Interlock

Date: 191107	Ver: 1	Drawn by: CEM
Filename: S15011.DWG		Sheet 1 of 1

NETWORK SWITCH
TO ETH1616
TO ACORN
FROM PC

SafetyDoorLockConfirmed
SafetyDoorSwitchClosed

H4
13-16 COM
16 IN
15 IN
14 IN
13 IN
OPTOS
SIP 1
9-12 COM
12 IN
11 IN
10 IN
9 IN
SIP 2
H5
5-8 COM
8 IN
7 IN
6 IN
5 IN
SIP 3
1-4 COM
4 IN
3 IN
2 IN
1 IN
SIP 4

A0
A1
A2
A3
A4

RELAY OUTPUT COMMONS
SHOULD BE FUSED TO
5A MAX (NO)
3A MAX (NC)

ETH1616
190529
PN:14849

SHIELDED ETHERNET CABLE
FROM NETWORK SWITCH

H6
GRN EGND
BLK 24GND
YEL 24VDC
24VDC
SERIAL 1

COM
OUT1
OUT2
OUT3
OUT4
OUT5
OUT6
OUT7
OUT8
5V
H2

COM
OUT9
OUT10
OUT11
OUT12
OUT13
OUT14
OUT15
OUT16
5V
H1

RELAY BOARD
OUT1
OUT2
OUT3
OUT4
OUT5
OUT6
OUT7
OUT8
GND
IN1
IN2
IN3
IN4
IN5
IN6
IN7
IN8
VCC

RELAY BOARD
OUT1
OUT2
OUT3
OUT4
OUT5
OUT6
OUT7
OUT8
GND
IN1
IN2
IN3
IN4
IN5
IN6
IN7
IN8
VCC

SafetyDoorLockConfirmed
SafetyDoorSwitchClosed
SafetyDoorLockOpen
24VACH
24VACN
COM

XCS-TE
DOOR INTERLOCK
DOOR LOCKED
NOTE: INTERNAL BLACK WIRE MUST BE ON 21
DOOR CLOSED
BLK
31
(32)
21
22
UNLOCK
SOLENOID
E1
E2

24VACH
24VACN
24VAC SOLENOID SUPPLY

2.2A (+5VDC) V1
COM
1.0A (+24VDC) V2
MEANWELL
RD-35B
N
L
BLK
YEL
GRN
GRN
WHT
BLK
110VAC

COM
COM

OPTIONAL CONNECTIONS ARE BLUE
GROUNDS ARE GREEN
110VAC IS VIOLET

SONGLE RELAY

	RELAY ISO9002	SRD

1. MAIN FEATURES

- Switching capacity available by 10A in spite of small size design for highdensity P.C. board mounting technique.
- UL,CUL,TUV recognized.
- Selection of plastic material for high temperature and better chemical solution performance.
- Sealed types available.
- Simple relay magnetic circuit to meet low cost of mass production.

2. APPLICATIONS

- Domestic appliance, office machine, audio, equipment, automobile, etc.
  (Remote control TV receiver, monitor display, audio equipment high rushing current use application.)

3. ORDERING INFORMATION

SRD	XX VDC	S	L	C
Model of relay	Nominal coil voltage	Structure	Coil sensitivity	Contact form
SRD	03、05、06、09、12、24、48VDC	S:Sealed type	L:0.36W	A:1 form A
				B:1 form B
		F:Flux free type	D:0.45W	C:1 form C

4. RATING

CCC	FILE NUMBER:CH0052885-2000	7A/240VDC
CCC	FILE NUMBER:CH0036746-99	10A/250VDC
UL /CUL	FILE NUMBER: E167996	10A/125VAC 28VDC
TUV	FILE NUMBER: R9933789	10A/240VAC 28VDC

5. DIMENSION(unit:mm) DRILLING(unit:mm) WIRING DIAGRAM

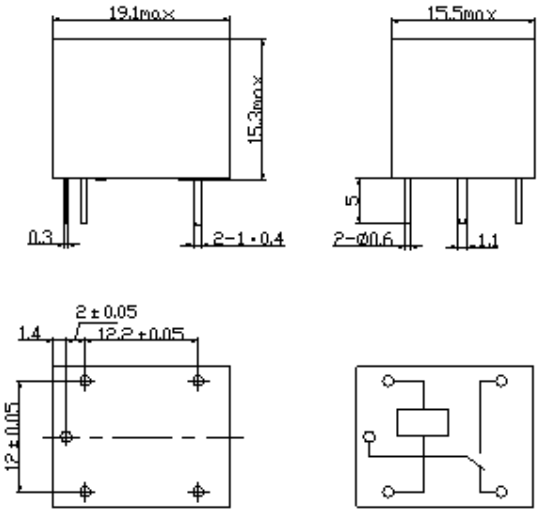

6. COIL DATA CHART (AT20°C)

Coil Sensitivity	Coil Voltage Code	Nominal Voltage (VDC)	Nominal Current (mA)	Coil Resistance (Ω) ±10%	Power Consumption (W)	Pull-In Voltage (VDC)	Drop-Out Voltage (VDC)	Max-Allowable Voltage (VDC)
SRD (High Sensitivity)	03	03	120	25	abt. 0.36W	75%Max.	10% Min.	120%
	05	05	71.4	70				
	06	06	60	100				
	09	09	40	225				
	12	12	30	400				
	24	24	15	1600				
	48	48	7.5	6400				
SRD (Standard)	03	03	150	20	abt. 0.45W	75% Max.	10% Min.	110%
	05	05	89.3	55				
	06	06	75	80				
	09	09	50	180				
	12	12	37.5	320				
	24	24	18.7	1280				
	48	48	10	4500	abt. 0.51W			

7. CONTACT RATING

Item \ Type	SRD	
	FORM C	FORM A
Contact Capacity Resistive Load (cosΦ=1)	7A 28VDC 10A 125VAC 7A 240VAC	10A 28VDC 10A 240VAC
Inductive Load (cosΦ=0.4 L/R=7msec)	3A 120VAC 3A 28VDC	5A 120VAC 5A 28VDC
Max. Allowable Voltage	250VAC/110VDC	250VAC/110VDC
Max. Allowable Power Force	800VAC/240W	1200VA/300W
Contact Material	AgCdO	AgCdO

8. PERFORMANCE (at initial value)

Item \ Type	SRD
Contact Resistance	100mΩ Max.
Operation Time	10msec Max.
Release Time	5msec Max.
Dielectric Strength Between coil & contact Between contacts	 1500VAC 50/60HZ (1 minute) 1000VAC 50/60HZ (1 minute)
Insulation Resistance	100 MΩ Min. (500VDC)
Max. ON/OFF Switching Mechanically Electrically	 300 operation/min 30 operation/min
Ambient Temperature	-25°C to +70°C
Operating Humidity	45 to 85% RH
Vibration Endurance Error Operation	 10 to 55Hz Double Amplitude 1.5mm 10 to 55Hz Double Amplitude 1.5mm
Shock Endurance Error Operation	 100G Min. 10G Min.
Life Expectancy Mechanically Electrically	 10^7 operations. Min. (no load) 10^5 operations. Min. (at rated coil voltage)
Weight	abt. 10grs.

9.REFERENCE DATA

Coil Temperature Rise

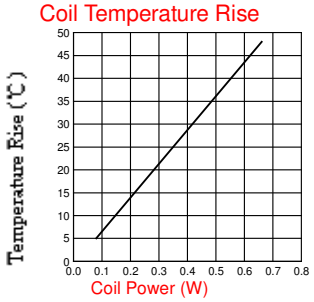

Operation Time

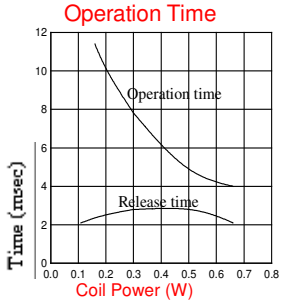

Life Expectancy

AC120V/DC24V cosΦ=1

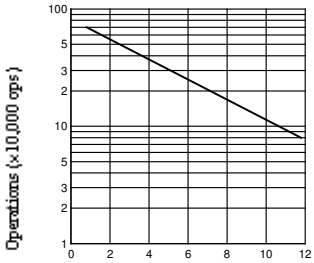

Life Expectancy

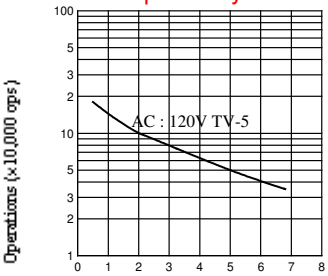

Ether1616 Specifications Manual
9-10-19

Overview

The Ether1616 is a digital I/O board used to add digital inputs and outputs to controls using Ethernet. The Ether1616 has 16 digital outputs designed to connect to relay boards and 16 optically isolated inputs.

Ether1616 Features

Application:	PLC Expansion Board
Digital Inputs:	16
Digital Outputs:	16
Control Interface:	Ethernet / UDP
Update Rate:	Variable
Dimensions (W*D*H):	9.8 * 3 * 0.75 inches

Ether1616 Connection Overview

The Ether1616 communicates with a PC over a RJ45 / Ethernet cable. Typical connection is through an Ethernet switch to the PC along with an ACORN board on the network. Shielded Ethernet cables are required. Shielded Ethernet cables have METAL jackets on the RJ45 connectors.

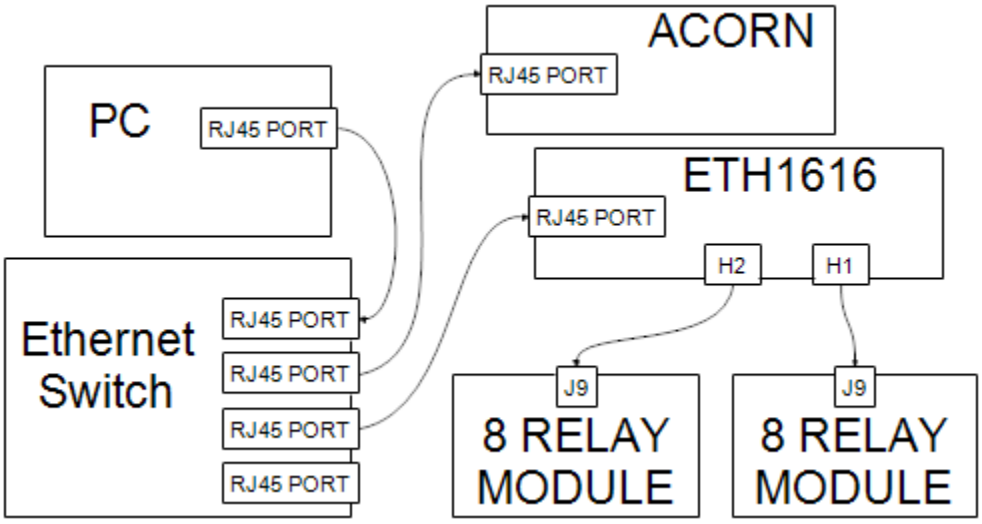

Ether1616 Outputs

Sixteen 5 volt logic outputs are available on the Ether1616. The outputs are intended to be used with external 8 relay modules. The default (off) logic state is high. A low level will activate a relay on the external board.

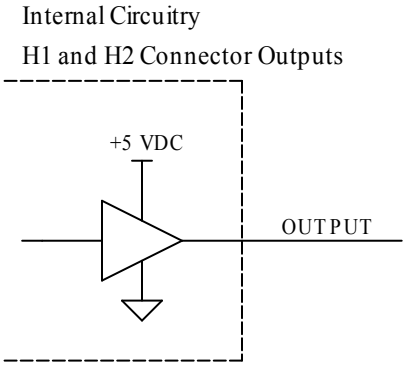

Ether1616 Inputs

The Ether1616 has 16 optically isolated inputs. Inputs are divided into banks of four. Each bank is configurable for various voltages and sinking or sourcing polarity. Voltage may be selected by installing the appropriate value resistor pack or SIP into a socket for each bank. Without a SIP installed, input voltage is set to 24V. Optional SIPs may be installed to use 12V or 5V input voltage. Polarity is determined by wiring the common terminal for the bank to the supply positive or supply common.

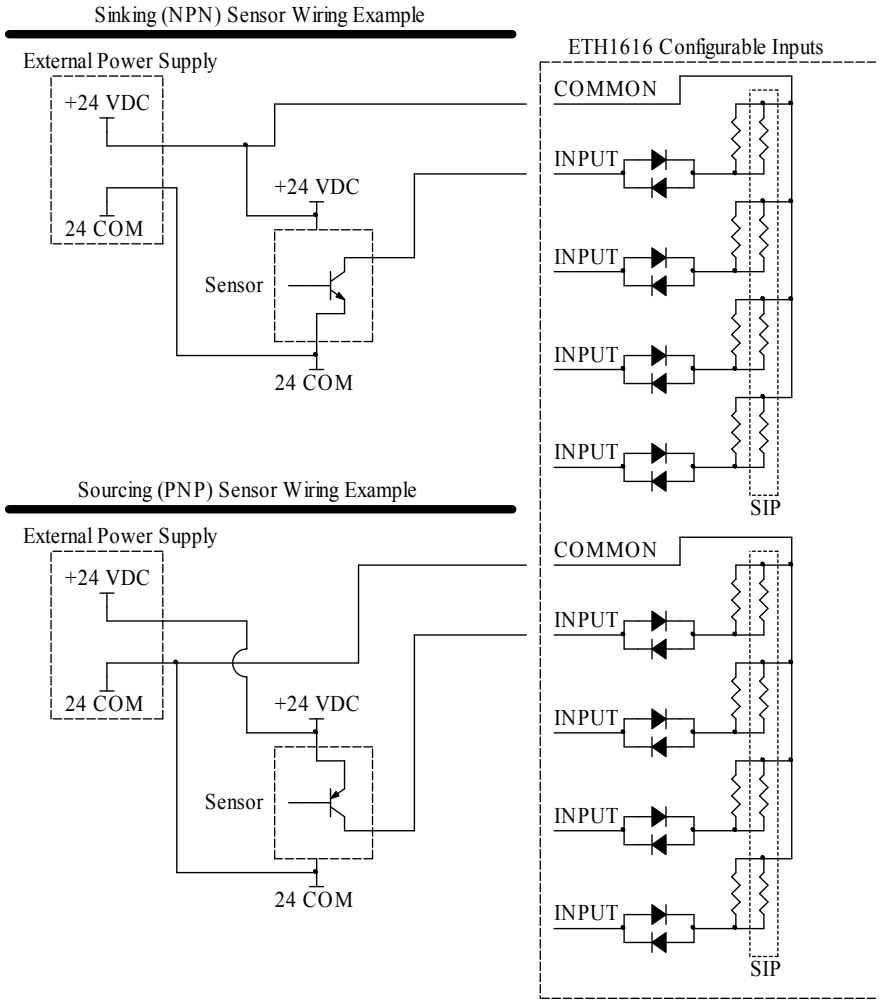

.

SIP Identification - XXX Indicates Valu

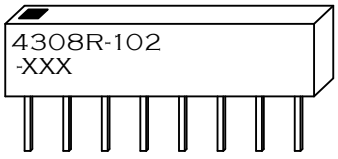

SIP Internal Wiring / Pinou

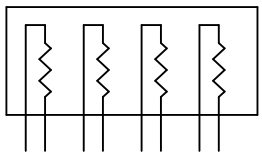

SIP Input Voltage Selection

SIP Value Marking	Resistor Value (Ohms)	Input Voltage
221	220	5
102	1.0k	12
None	None	24

Communication

Ethernet and UDP protocol is used to communicate with Ether1616. The IP address may be dynamic (DHCP) or static. Jumpers J2, J3, J4, J5, and J6 (also labeled A0 through A4) may be used to set the address. The following chart shows the first 8 possible settings. Notice that A0 through A4 create a binary number, allowing up to 31 static IP address assignments. Installing all jumpers performs a password reset, so the highest address can not be used with a password.

For normal use with Centroid ACORN and CNC12 software, only one jumper block on A0, A1, or A2 should be used. This allows for up to three Ether1616 boards to be used with ACORN.

IP Address Settings

A4	A3	A2	A1	A0	IP address
0	0	0	0	0	DHCP
0	0	0	0	1	10.168.41.3
0	0	0	1	0	10.168.41.4
0	0	0	1	1	10.168.41.5
0	0	1	0	0	10.168.41.6
0	0	1	0	1	10.168.41.7
0	0	1	1	0	10.168.41.8
0	0	1	1	1	10.168.41.9
1	1	1	1	1	Password Reset

When used with ACORN, a static IP address must be used. The IP address will also determine the location that I/O will be mapped in. Ether1616 is not intended to work with Centroid systems other than ACORN. I/O mapping of other systems may conflict with the locations used by Ether1616.

I/O Mapping Relationships

Slot	Start INP	End INP	Debounce start	Debounce end	Ether1616 mapping
1	1	16	SV_PLC_DEBOUNCE_1	SV_PLC_DEBOUNCE_4	
2	17	32	SV_PLC_DEBOUNCE_5	SV_PLC_DEBOUNCE_8	
3	33	48	SV_PLC_DEBOUNCE_9	SV_PLC_DEBOUNCE_12	10.168.41.3
4	49	64	SV_PLC_DEBOUNCE_13	SV_PLC_DEBOUNCE_16	10.168.41.4
5	65	80	SV_PLC_DEBOUNCE_17	SV_PLC_DEBOUNCE_20	10.168.41.6
6	81	96	SV_PLC_DEBOUNCE_21	SV_PLC_DEBOUNCE_24	
…	…	…			
15	225	240	SV_PLC_DEBOUNCE_57	SV_PLC_DEBOUNCE_60	
16	241	256			
…	…	…			
48	753	768			

The previous chart shows how Ether1616 boards map into the normal PLC I/O space. PLC I/O is organized into 16 bit "slots". There are 48 slots total that correspond to 768 inputs and outputs. The first 15

slots (240 I/O) can have input debounce settings customized through the corresponding SV_PLC_DEBOUNCE_x system variables.

The first 80 I/Os may be forced or inverted from the <ALT-I> PLC Diagnostic screen. See the "CNC PLC, Macro, and Skinning Programming Manual" for descriptions of SV_INVERT_INPx_x_BITS, SV_FORCE_INPx_x_BITS, SV_FORCE_ON_OUTx_x_BITS, and SV_FORCE_OFF_OUTx_x_BITS. Up to 3 Ether1616s could potentially be connected and use the force and invert functionality.

Low Level Communication

Ether1616 uses a fairly simple command format that doesn't necessarily require Centroid software to function. This section is useful for interfacing directly with Ether1616. This section may be ignored by those using CNC12 software with Ether1616.

UDP port 7855 is used to communicate with Ether1616. Commands and responses are plain text with a new line ('\n', 0x0A) ending. Format must be exactly as shown - there is no case conversion or excess white space removal, etc.

Command Quick Reference

Command	Response
Ether1616_RESPOND	Ether1616_AT <IP>
GET_MACID	MACID <MAC address>
SET_OUTPUTS <16bit Hex> <tag>	INPUTS <16 bit hex> <tag>
SET_NOTE <note>	NOTE_SET
GET_NOTE	NOTE <note>
SET_DBNC <settings>	DBNC_SET
SET_DBNCTIMES <settings>	DBNCTIMES_SET
GET_VERSION	VERSION <16 bit hex>
SET_TIMEOUT <time in 1/10s>	TIMEOUT <time in 1/10s>
ECHO <tag>	ECHO <tag>
GET_5V0A	5V0A <value>
GET_5V0B	5V0B <value>
GET_24V0	24V0 <value>
GET_JUMPERS	JUMPERS <value>
SET PASSWORD <pwd>	PASSWORD_SET
PASSWORD <pwd>	PASSWORD_OK

Error Messages

Error Message	Description
ERROR_IN_CMD	Error in command parameters
ERROR_NOTE_TOO_LONG	Note over 63 characters
ERROR_UNKOWN_CMD "cmd"	Unrecognizable command
ERROR_PASS_TOO_LONG	Password over 31 characters
ERROR_PASSWORD_FAIL	Password needed for this command

Ether1616_RESPOND - This command can be broadcast on the network to find Ether1616 boards. The response from Ether1616 will be Ether1616_AT <IP>, where IP is the Ether1616's IP address.
Example response: Ether1616_AT 10.168.41.3

GET_MACID - Requests the Ether1616's MAC address. Response is MACID <MAC address>, where MAC address is a globally unique 48 bit number.
Example response: MACID 00:04:A3:09:6E:7D

SET_OUTPUTS <16 bit hex> <tag> - Send output states. The response is the input states in the format INPUTS <16 bit hex> <tag>. Because inputs are sent in response to outputs, the update rate is controlled by the send frequency of the SET_OUTPUTS command. Under typical network conditions, update rate should not be expected to exceed 1000 updates per second (1ms per response). Because UDP does not have a guarantee of delivery, requests should be repetitive to overcome possible data loss. In other words, do not rely on polling only when an output changes or an input state is required.

The optional tag field may be any identifier. The tag sent with the SET_OUTPUTS command will be returned unmodified with the INPUTS response. This feature can be helpful for tracking packet order and integrity. Generally, a packet number or time stamp will be used for the tag.
Example command: SET_OUTPUTS 0B01 Tag1. Example Response: INPUTS F02A Tag1.

SET_NOTE <note> - A note may be stored on the Ether1616 to easily identify it in networks with multiple Ether1616s. Example command: SET_NOTE light control board Example Response: NOTE_SET

GET_NOTE - Command returns the string saved by SET_NOTE.
Example command: GET_NOTE. Example Response: NOTE light control board

SET_DBNC <settings> - See the "PLC Debounce System Variable Description", " CNC11 PLC Programming Manual", " PLC Protocol User's Manual", or the comments in a PLC program for more information on debounce operation. The time increment for Ether1616 debounce times is 0.0000625 seconds (62.5 us). The resolution for debounce is 250us on Ether1616. This means that changes finer than 250us will cause no change in debounce.

Debounce setup words are packed so that 3 input debounce settings fit in a 16 bit word. Debouce settings for Ether1616 require 6 16 bit words.

The first 5 words of debounce setup are packed as follows.

15	14	13	12	11	10	9	8	7	6	5	4	3	2	1	0
Spare	select	select	select	invert	force	select	select	select	invert	force	select	select	Select	invert	force

The last word of debouce setup only has one input setting, the remaining bits are spare.

15	14	13	12	11	10	9	8	7	6	5	4	3	2	1	0
Spare	Spare	Spare	Spare	Spare	Spare	Spare	Spare	Spare	Spare	Spare	select	select	select	invert	force

Example command: SET_DBNC 1084 1084 1084 1084 1084 0004. Example Response: DBNC_SET.

SET_DBNCTIMES <settings> - Sets debounce times. There are 8 space separated 16bit values following this command for the 8 debounce times. The first time is always 0, while the remaining times are multiples of 0.0000625 seconds.
Example command: SET_DBNCTIMES 0000 0018 0030 0050 00A0 0140 0280 0500.
Example Response: DBNCTIMES_SET.

GET_VERSION - This returns a firmware version number. Example Response: VERSION 0161.

SET_TIMEOUT <time in 1/10s> - A timer shuts off all outputs after the default 2 seconds without communication. This command can change the timeout from the default value. A value of 0 disables the timeout. The number format is 16bit hex. The example sets the timeout to 1 second.
Example command: SET_TIMEOUT 000A. Example Response: TIMEOUT 000A.

ECHO <tag> - A command useful for testing, which returns whatever text is used for <tag>.
Example command: ECHO time 1705. Example Response: ECHO time 1705.

GET_5V0A - Report the actual voltage of the 5.0V nominal voltage for H1 and logic.
Example command: GET_5V0A. Example Response: 5V0A 5.002.

GET_5V0B - Report the actual voltage of the 5.0V nominal voltage for H2.
Example command: GET_5V0B. Example Response: 5VB 4.997.

GET_24V0 - Report the actual voltage of the on board 24.0V nominal supply.
Example command: GET_24V0. Example Response: 24V0 24.281.

GET_JUMPERS - Report the state of jumpers A0 to A4.
Example command: GET_JUMPERS. Example Response: JUMPERS 001F.

SET_PASSWORD <pwd> - Set a password. Omitting <pwd> reverts back to no password required. If enabled, the password will be required for any command that changes data on the Ether1616. The password is intended to prevent accidentally controlling the wrong Ether1616 on a general purpose network where there are multiple PCs and Ether1616s installed. It should not be considered high security. The password may be reset to none required by applying all jumpers (A4 to A0) and applying power to the board for a few seconds.
Example command: SET_PASSWORD testpass. Example Response: PASSWORD_SET.

PASSWORD <pwd> - Enter the password. A correct password will allow full control of the Ether1616 from the device (IP address) that the PASSWORD command was sent from. If another device (different IP address) sends a correct password, it will take control of the Ether1616 and block changes from the first device.
Example command: PASSWORD testpass. Example Response: PASSWORD_OK.

Ether1616 Power

Ether1616 requires 24V power to be wired to H7. The 24V supply powers internal logic as well as passing through to external relay boards. An additional 24V, 12V, or 5V supply is recommended to power the inputs. Using an isolated supply for the inputs can improve noise immunity.

Ether1616 Specifications

Characteristic	Min.	Typ.	Max.	Unit
5 Volt Input Off	-	-	1.8	V
5 Volt Input On	4.1	-	-	V
12 Volt Input Off	-	-	3.5	V
12 Volt Input On	10.3	-	-	V
24 Volt Input Off	-	-	5.9	V
24 Volt Input On	24	-	-	V
Supply Voltage (Vsup)	23	24	25	V
Supply Current	1.4	-	-	A
Input Pullup Voltage (Vinp)	4.5	24	26	V
Input Operating current	9	14	20	mA
Output Current	0	5	25	mA
Output Voltage High	4.15	-	5.1	V
Output Voltage Low	0	-	0.44	V
Size: 9.8 * 3 * 0.75 (W*D*H)				Inches

* Inputs may be wired either polarity. Input "on" and "off" ratings in the chart refer to the absolute difference between the input terminal and common terminal. Input devices must meet these specifications for long term reliability.

Ether1616 Troubleshooting

Symptom	Possible Cause	Corrective Action
LED1 out	Power loss	Check RJ45 cable to H7
Input doesn't work with sensor	Incorrect wiring	Correct wiring for sensor type (sinking or sourcing), check that SIP values are appropriate for the input voltage
	Voltage drop across sensor is too high	Use 3-wire sensors with lower voltage drop spec.

LED1 Error Codes

Error Number	Meaning	Cause	Corrective Action
1	No IP Address	DHCP in progress or failed	Wait for DHCP to finish or use jumpers J3 - J7 to select a static IP
2	No Link	Ethernet cable disconnected	Check cable and related network hardware
3			
4			
5			
6			
7			
8			
9			

Ether1616 Connections and Mounting Dimensions

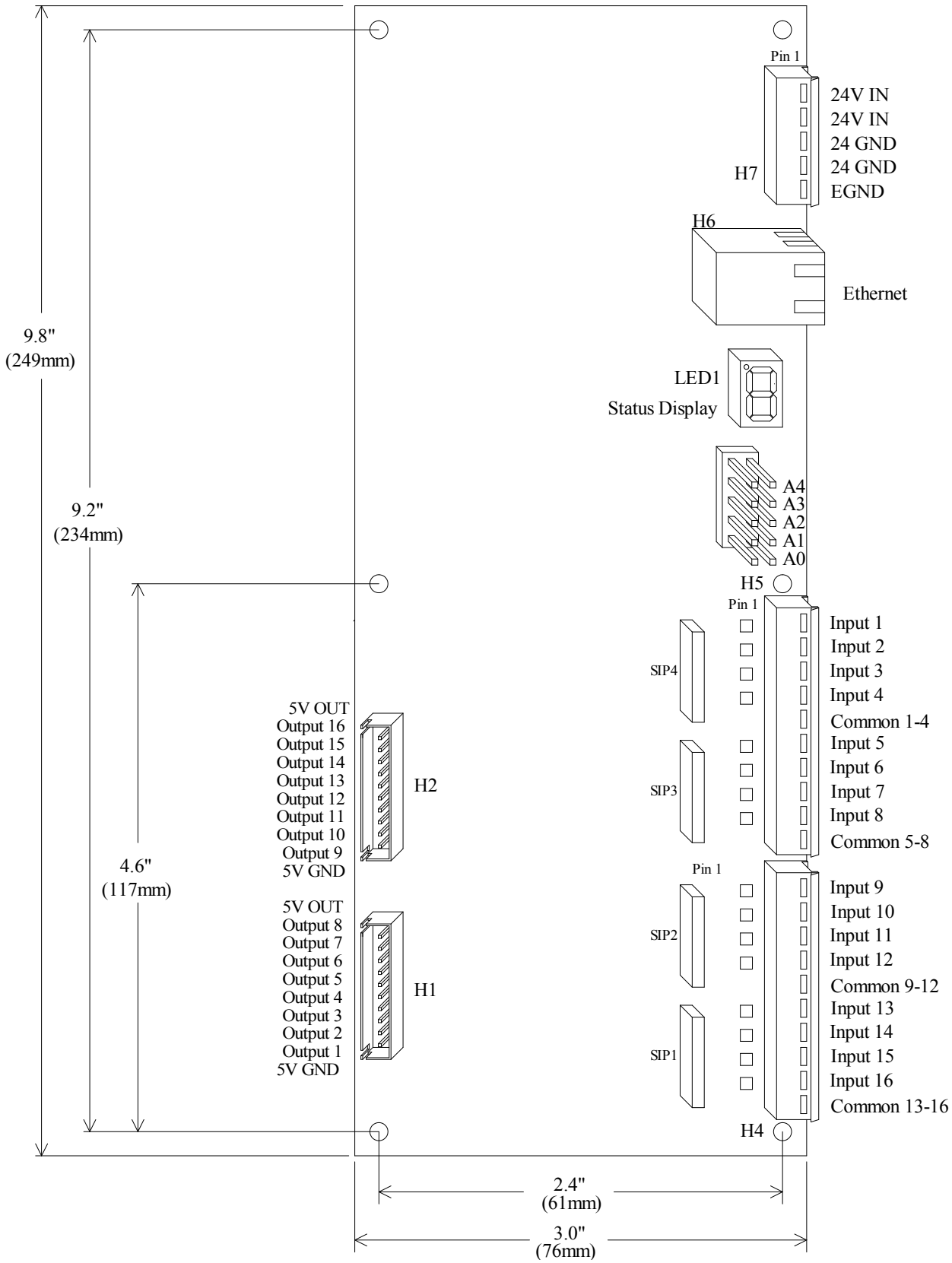

8 Relay Module Connections and Mounting Dimensions

Acorn Ether1616 Mounting Footprint.
1:1 Drill Template
Make sure printer is not scaling.

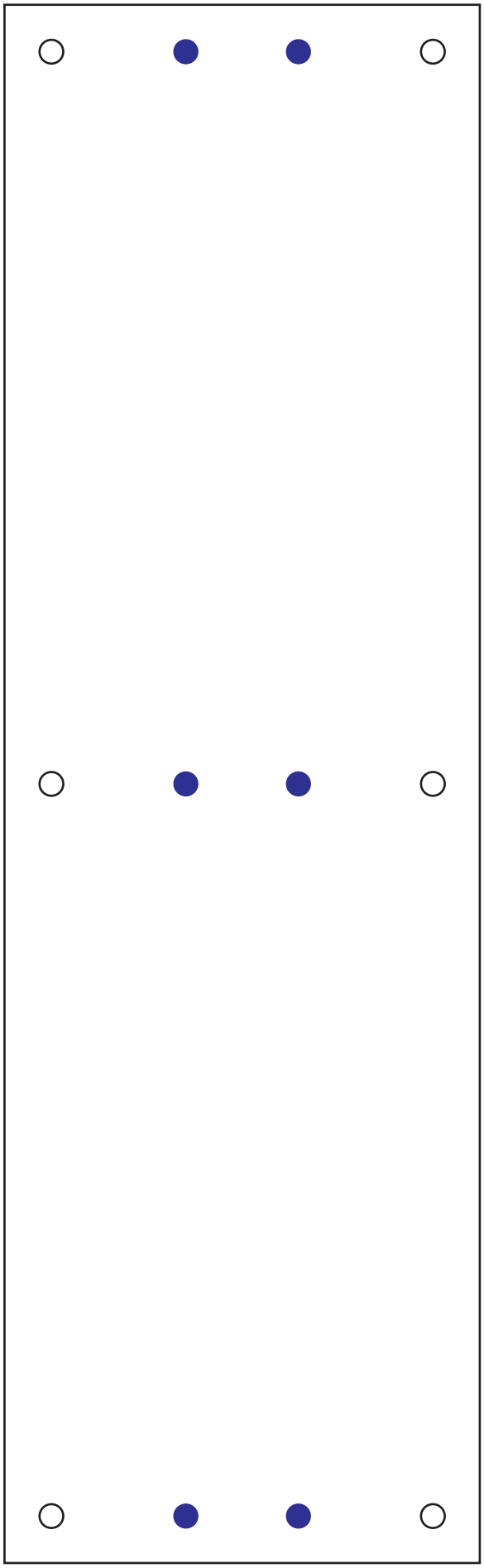

- Holes are clearence for 6-32
(.150" / 3.8 mm diameter)
- 6-32 metal standoffs are recommended

● Din Rail Mounting holes accept Din Rail standard clips such as the Wago 209188 clip and alternatives.
https://www.wago.com/us/rail-chassis-terminal-blocks/mounting-foot/p/209-188

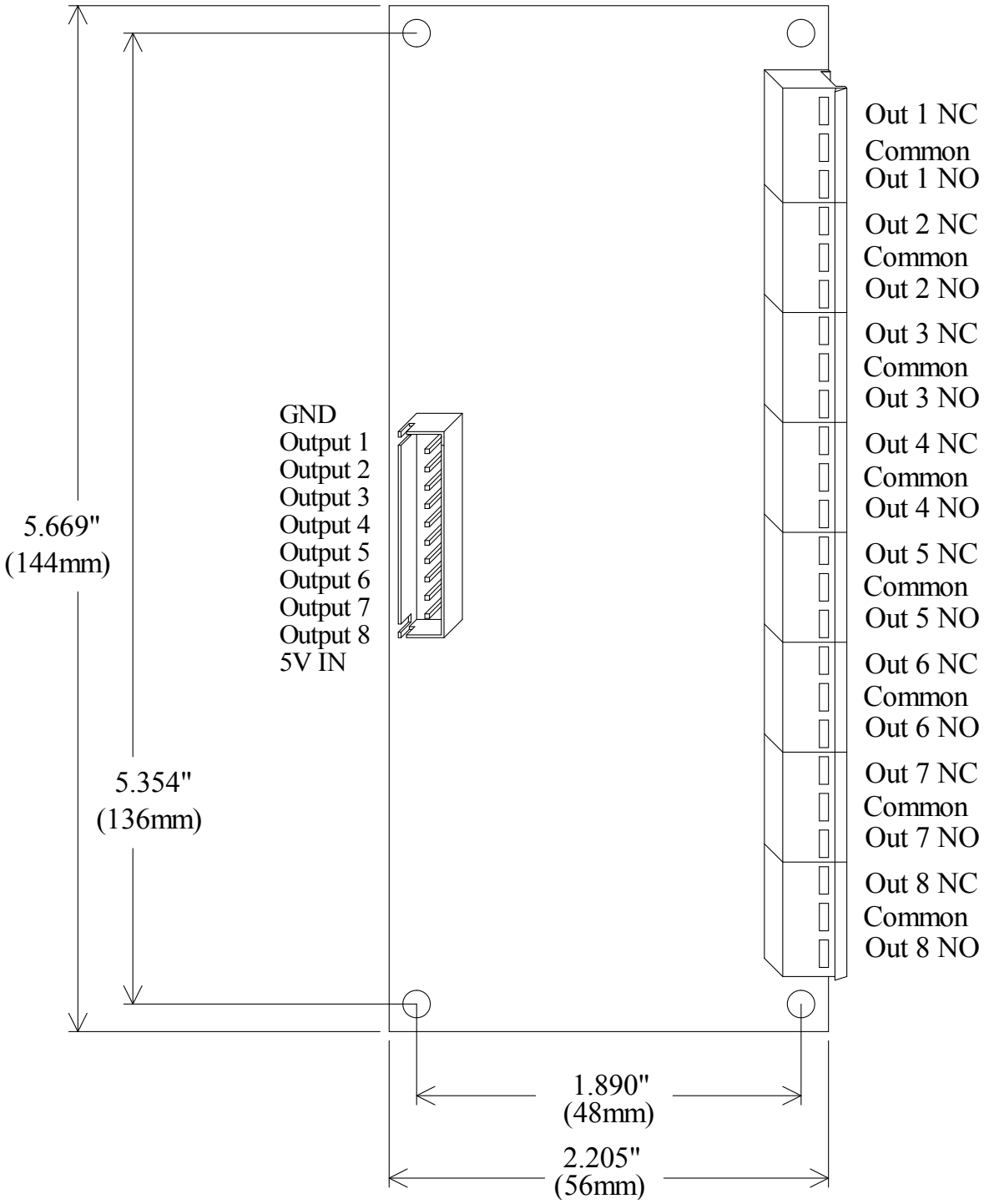
Out 1 NC
Common
Out 1 NO
Out 2 NC
Common
Out 2 NO
Out 3 NC
Common
Out 3 NO
Out 4 NC
Common
Out 4 NO
Out 5 NC
Common
Out 5 NO
Out 6 NC
Common
Out 6 NO
Out 7 NC
Common
Out 7 NO
Out 8 NC
Common
Out 8 NO
GND
Output 1
Output 2
Output 3
Output 4
Output 5
Output 6
Output 7
Output 8
5V IN
5.669"
(144mm)
5.354"
(136mm)
1.890"
(48mm)
2.205"
(56mm)

Acorn CNC 8 Relay Module Mounting Footprint.

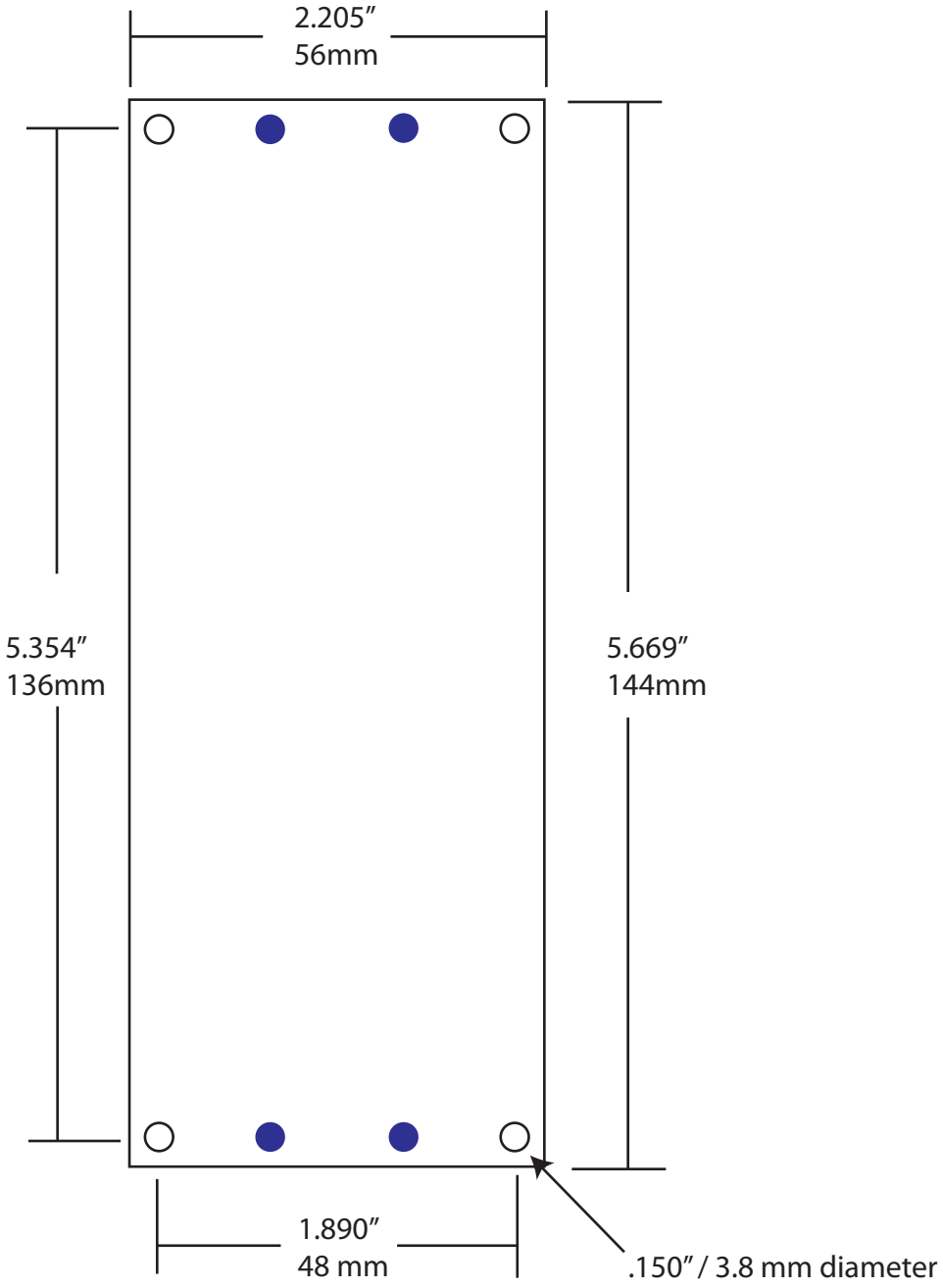

- Holes are clearence for 6-32 (.150″ / 3.8 mm diameter)
- 6-32 metal standoffs are recommended

● The 8 Realy Module Din Rail Mounting holes accept Din Rail standard clips such as the Wago 209188 clip and alternatives. https://www.wago.com/us/rail-chassis-terminal-blocks/mounting-foot/p/209-188