MOTOR MODEL NO.:	GM4050-60	
CONFIG. CODE:	GM4050-60-00902811-225C	
MOTOR CONSTANTS	UNITS	VALUE
CONTINUOUS STALL TORQUE	IN-LB	41.3
PEAK TORQUE	IN-LB	206.5
TORQUE CONSTANT (K_T)	IN-LB/AMPS	5.06
R_A *	OHMS	0.9
INDUCTANCE (L_A) *	MHY	6.30
BEMF *	VOLTS/1000 RPM	60
MAXIMUM SPEED	RPM	2200
INERTIA (J_A)	IN-LB-SEC ^{2}	0.01980
TACHOMETER OUTPUT	VOLTS/1000 RPM	-
TACHOMETER RIPPLE	PERCENT	-
WEIGHT	LB/KG	-

* INDICATES ±10%

MOLEX: 5057-9409

PIN	FUNCTION
1	CHANNEL A+
2	CHANNEL A-
3	CHANNEL B+
4	CHANNEL B-
5	CHANNEL Z+
6	CHANNEL Z-
7	ENCODER +5VDC
8	ENCODER COMMON
9	ENCODER SHIELD

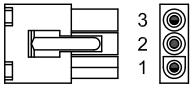

AMP: 19-09-1039

PIN	FUNCTION
1	MOTOR -
2	MOTOR CASE GRND
3	MOTOR +

REVISION HISTORY

ZONE	REV	DESCRIPTION	ECO	DATE	CHANGED	APPD
C-4	C1	ADDED .25" TO COVER LENGTH (FOR APPROVAL)	5328	9MAR20	K. HALE	R.D.M.

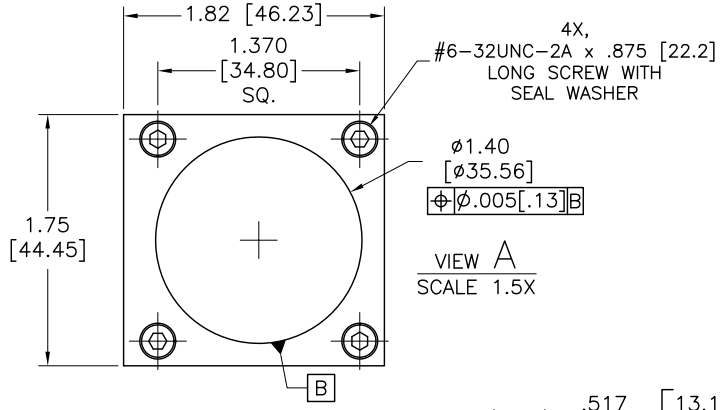

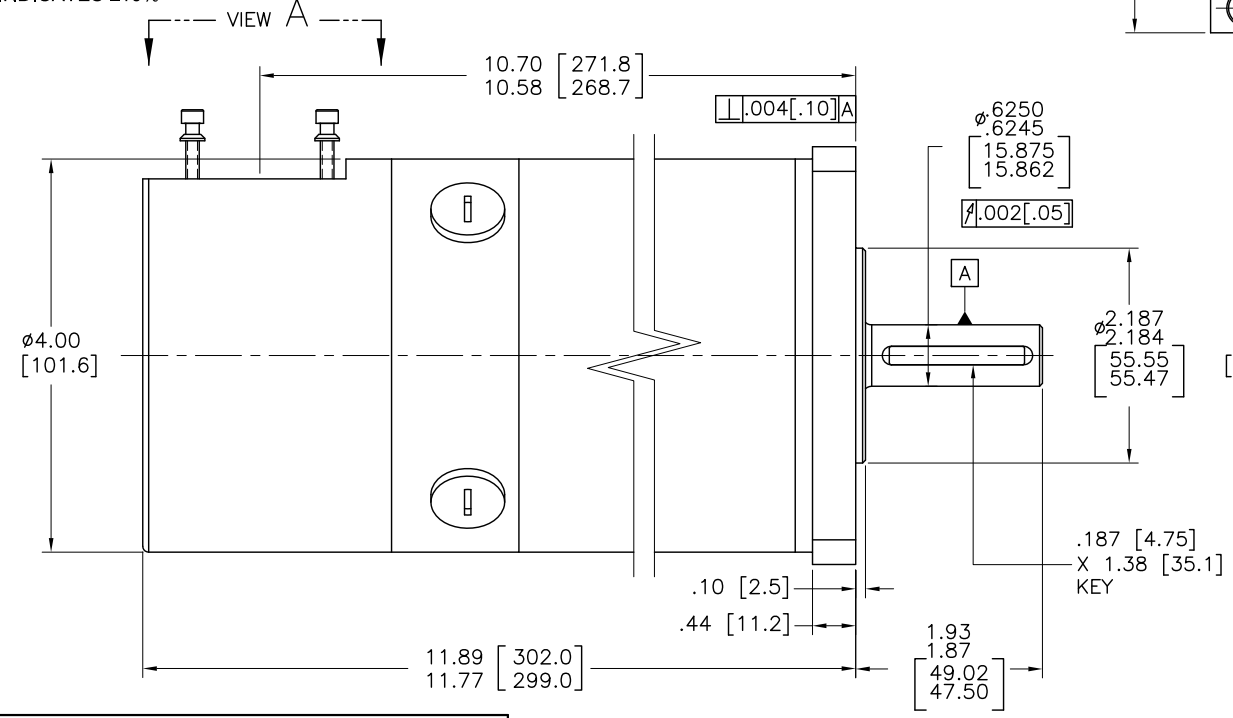

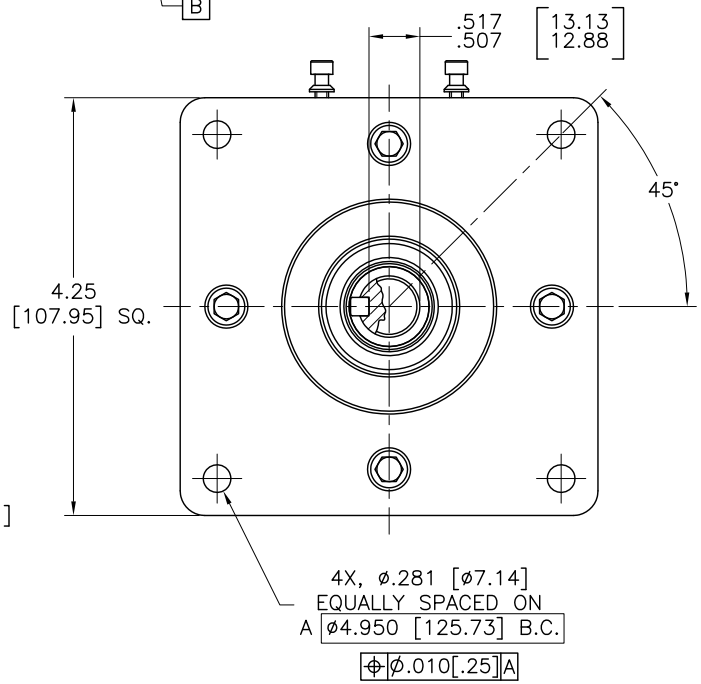

ENCODER'S DATA CHART	
LINE COUNT	5000 PPR
FREQUENCY RESPONSE	200 kHz MAX. (UP TO 85 °C) 100 kHz MAX. (UP TO 100 °C)
RISE AND FALL TIME	100 nSEC. MAX.
FRICTION TORQUE	9.8 X 10^{-3} N • m MAX. (100 g - cm MAX.)
ROTOR MOMENT OF INERTIA	6.5 X 10^{-6} kg • m^2 MAX. (65 g - cm^2 MAX.)
MAX. SPEED	100 S^{-1} (6000 RPM)
OPERATING TEMP. RANGE	-20 °C ~ +100 °C
STORAGE TEMP. RANGE	-25 °C ~ +100 °C
VIBRATION (TEST ARTICLES)	49 m/S^2 (5 G) 10 ~ 500 Hz.
SHOCK (TEST ARTICLES)	490 m/S^2 (50 G) 11 mSEC.

4. SHAFT SEAL INSTALLED.
3. MOTOR FINISH: BLACK.
2. INCHES [MILLIMETERS].
1. WITH A POSITIVE VOLTAGE APPLIED TO PIN#3 (RED MOTOR LEAD) WITH RESPECT TO PIN#1 (BLACK MOTOR LEAD), THE MOTOR DRIVE SHAFT WILL TURN IN THE "CW" DIRECTION AS VIEWED FROM THE SHAFT END.

NOTES: UNLESS OTHERWISE SPECIFIED.

UNLESS OTHERWISE SPECIFIED DIMENSIONS ARE IN INCHES	APPROVAL	DATE
TOLERANCES ARE AS FOLLOWS: DECIMAL: .XX = ±0.01, .XXX = ±0.005; ANGULAR: < = ±0.5°	DWN BY: M.TAGUPA	5OCT17
	CHK BY: R.D.M.	5OCT17
FINISH: 125 MAXIMUM	APP BY: R.D.M.	5OCT17

THE INFORMATION CONTAINED WITHIN THIS DOCUMENT WAS ORIGINATED BY AND IS THE EXCLUSIVE PROPERTY OF GLENTEK INC. THIS PROPRIETARY INFORMATION SHALL NOT BE REPRODUCED, TRANSFERRED TO OTHER DOCUMENTS, DISCLOSED TO OTHERS, USED FOR MANUFACTURING OR ANY OTHER PURPOSE WITHOUT PRIOR WRITTEN PERMISSION FROM GLENTEK, INC.

GLENTEK "Solutions for Motion Control"
208 Standard Street
El Segundo, CA 90245 USA
310.322.3026 FAX 310.322.7709
www.glentek.com

DRAWING TITLE: INSTALLATION DRAWING

SIZE	MODEL	DRAWING NUMBER	REV
C	GM4050-60	27732-1	C1

SCALE: 1:1 | FILE NAME: 27732-1RC1.DWG | SHEET 1 OF 1

CONFIGURATION CODE: GM4050-60-00902811-225C